This PPT was presented 4 Aug. 2008 by Ryan Bradburn in partial fulfillment of the requirements for the degree: Master of Public Health.

©2008 by Ryan Bradburn

All rights reserved.

Distribute and disseminate the information as much as you like, but please give credit where credit is due.

As for me, I would like to thank the personnel of the FSIS who lent me their time and expertise: Dr. Rob Clarkson, who endured me as his shadow for the bulk of the summer; William Scott, who shared his office and workspace on multiple occasions; Dr. Larry Darr, who oversees the inspection of a fantastic pot pie plant; Lisa Sobering, whose internship I “stole”; and the many, many others who shared their wisdom as they let me into their world of meat inspection.

My gratitude also to those at the university who have provided much needed support, employment, assistance, and encouragement during trying times, with special gratitude to my masters committee: Dr. Justin Kastner, Dr. Patricia Payne, and Dr. David Renter.

And last, but most assuredly not least, those in my personal life whose company is always a warm haven – they who readily share the simple joys in life even as I crash upon the complexities: Emily, Mom and Dad, Trav and Diane, Susha and Chack; and technograss players and jugglers throughout the Midwest.

Metta.

From *The Jungle* to HACCP:

A first-hand view of the United States meat inspection process

Ryan Bradburn

MPH Final Examination

Kansas State University Graduate School

A mile in *my* shoes

- A veritable smorgasbord of careers
  - 1996 - 1998: Music
  - 1998 - 2002: USMC (*Good Morning, Vietnam*)
  - 2002 - 2003: A return to college
  - 2004 - 2007: A shot at veterinary medicine
  - 2008: Salvage
- *Frontier*
  - "An interdisciplinary program for the historical studies of border security, food security, and trade policy."

A *Frontier* take on FSIS (1)

- 1862 - Lincoln creates Dept. of Ag
- 1884 - Bureau of Animal Industry
  - 20 employees and $150,000
- 1906 - Upton Sinclair's *The Jungle*
- 1906 - FMIA
- 1957 - PPIA
- 1970(1995) - EPIA

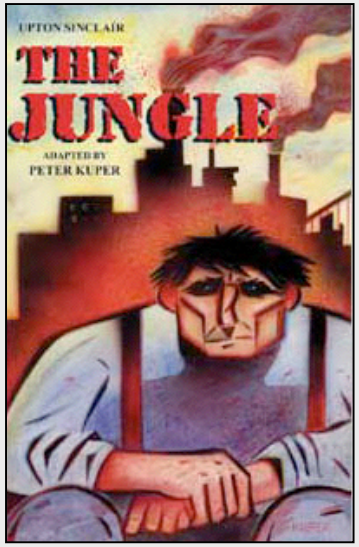

A *Frontier* take on FSIS (2)

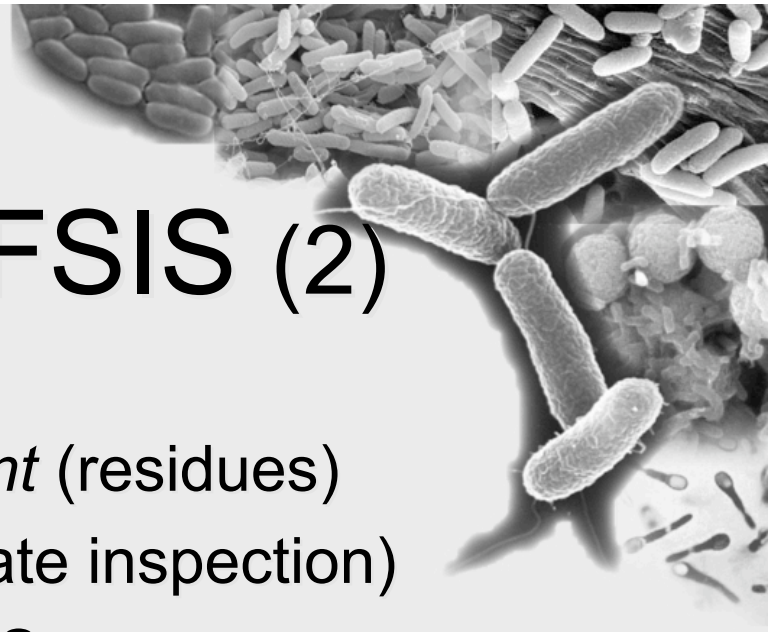

- 1958 - *Food Additive Amendment* (residues)
- 1967 - *Wholesome Meat Act* (state inspection)
- 1968 - 1972 - Merged with APHIS
- 1978 - *Humane Slaughter Act*
- 1981 - Food Safety and Inspection Service
- 1996 - Shift from organoleptic approach to more science-based HACCP system

- Current FSIS:
  - 9,500 employees (7,800 inspection)
  - 6,200 inspected establishments
  - $930 million budget

A *Frontier* take on HACCP (1)

- 1959 - Work begins to create safe food for NASA
  - In conjunction with Pillsbury Co. and US Army Natick Labs
- Dr. Howard Bauman, project head at Pillsbury Co.:
  - "If we had to do a great deal of destructive testing to come to a reasonable conclusion that the product was safe to eat, how much were we missing in the way of safety issues by principally testing only the end product and raw materials?

    "We concluded after extensive evaluation that the only way we could succeed would be to establish control over the entire process, the raw materials, the processing environment and the people involved." (Stevenson 2)

A *Frontier* take on HACCP (2)

- "Modes of Failure" adapted from Natick Labs
  - Gather knowledge and experience concerning the food product and process
  - Predict potential hazards, and how and when in the process they are liable to occur
  - If the process is uncontrolled at this point, there is an increased probability of a food safety problem

US ARMY SOLDIER SYSTEMS CENTER (Natick)

A *Frontier* take on HACCP (3)

- Hype over 1971 presentation of HACCP faded
- Return in 1985 with endorsement by Subcommittee of the Food Protection Committee of the National Academy of Sciences
- 1989 - Seven principles from three
  - Revisions in 1992 and 1997
- 1996 - Announced as FSIS rule
- 1998 - 2000 - phased into meat and poultry establishments (not egg product yet)

Hazard Analysis and Critical Control Points (1)

- Responsibility on the establishment to deliver a wholesome and safe product
- Regulatory HACCP:
  - Sanitation Performance Standards
  - Sanitation Standard Operating Procedures
  - HACCP

Hazard Analysis and Critical Control Points (2)

- Seven principles of HACCP
  - Conduct a hazard analysis
  - Determine the Critical Control Points (CCPs)
  - Establish critical limits for the CCPs
  - Establish monitoring procedures for the CCPs
  - Establish corrective actions, in case critical limits are not met
  - Establish verification procedures to ensure process is working
  - Establish record-keeping and documentation, allowing a third party (i.e.: FSIS) to verify the process

Sample flowchart (hotdogs)

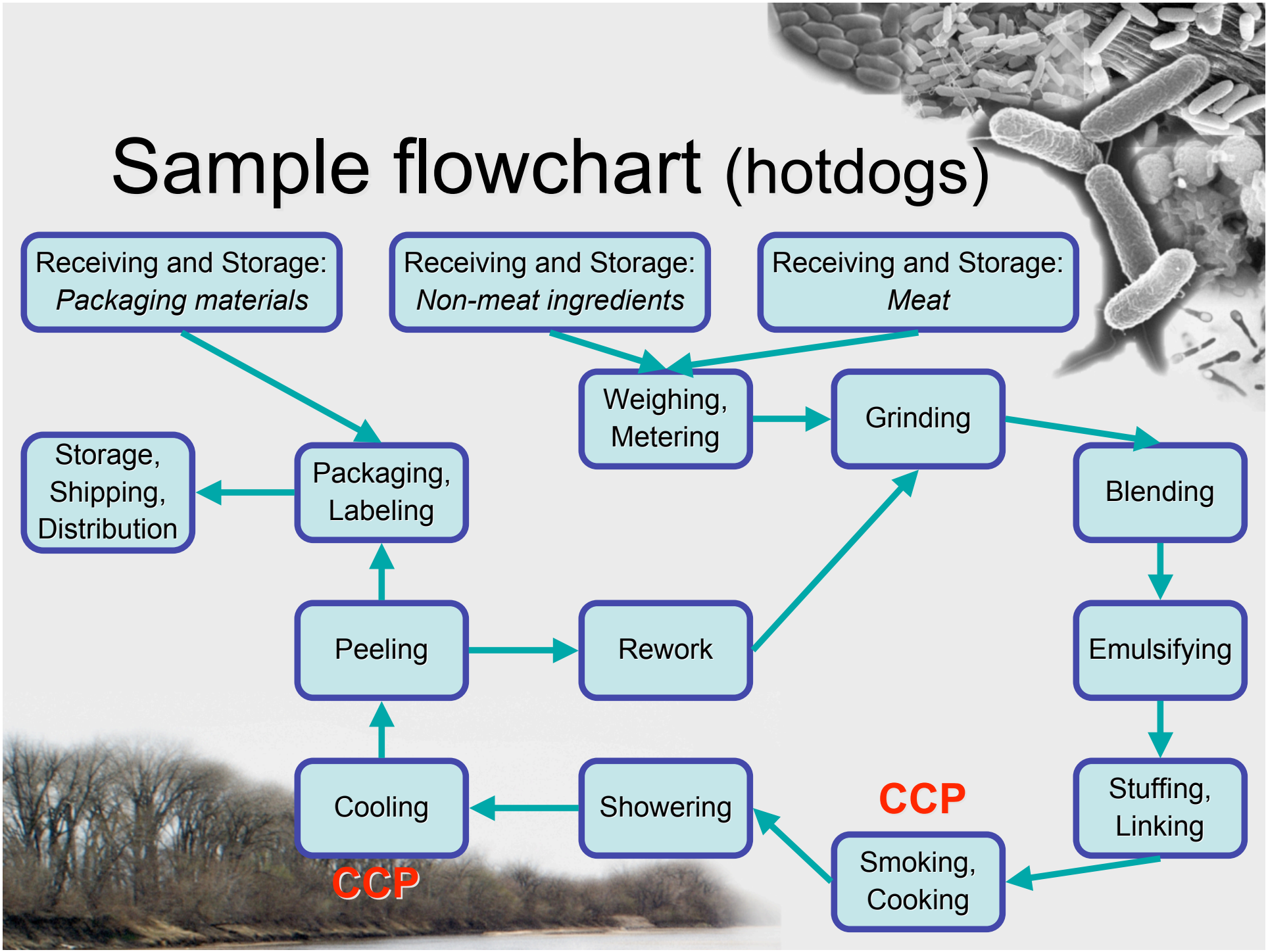

Sound HACCP decisions

- “Responsibility on establishment…”
- Show decision-making process
- Support decisions scientifically
- Other supporting documents:
  - Prerequisite programs
  - Good Manufacturing Practices

Current US food inspection

- DOC
  - NOAA
- HHS
  - FDA
- USDA
  - APHIS
  - AMS
  - FSIS

My FSIS chain of command

- Sec. of Ag: *Ed Schafer*
- Under sec. of Food Safety: *Dr. Richard Raymond*
- FSIS Administrator: *Al Almanza*
- OFO: *Dr. Kenneth Peterson*
- LDO: *(currently no DM)*
- FLS: *Dr. Larry Darr*
- PHV: *Dr. Rob Clarkson*

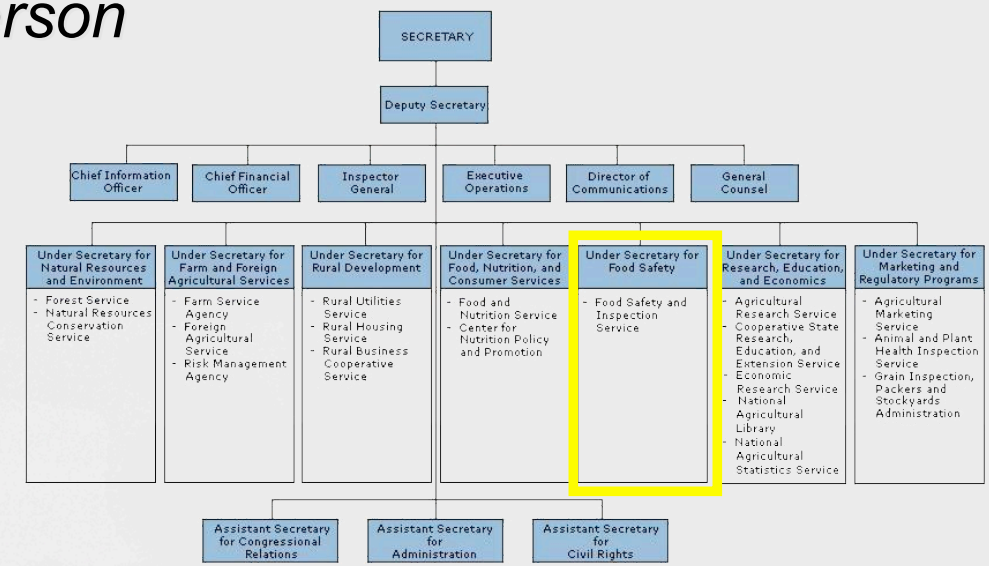

U.S. DEPARTMENT OF AGRICULTURE
FOOD SAFETY AND INSPECTION SERVICE
(37)

RECOMMENDED: _____ Administrator, Food Safety and Inspection Service _____ Date

CONCURRED: _____ Under Secretary for Food Safety _____ Date

APPROVED: **APPROVED AS OF 5-19-06** Assistant Secretary for Administration _____ Date

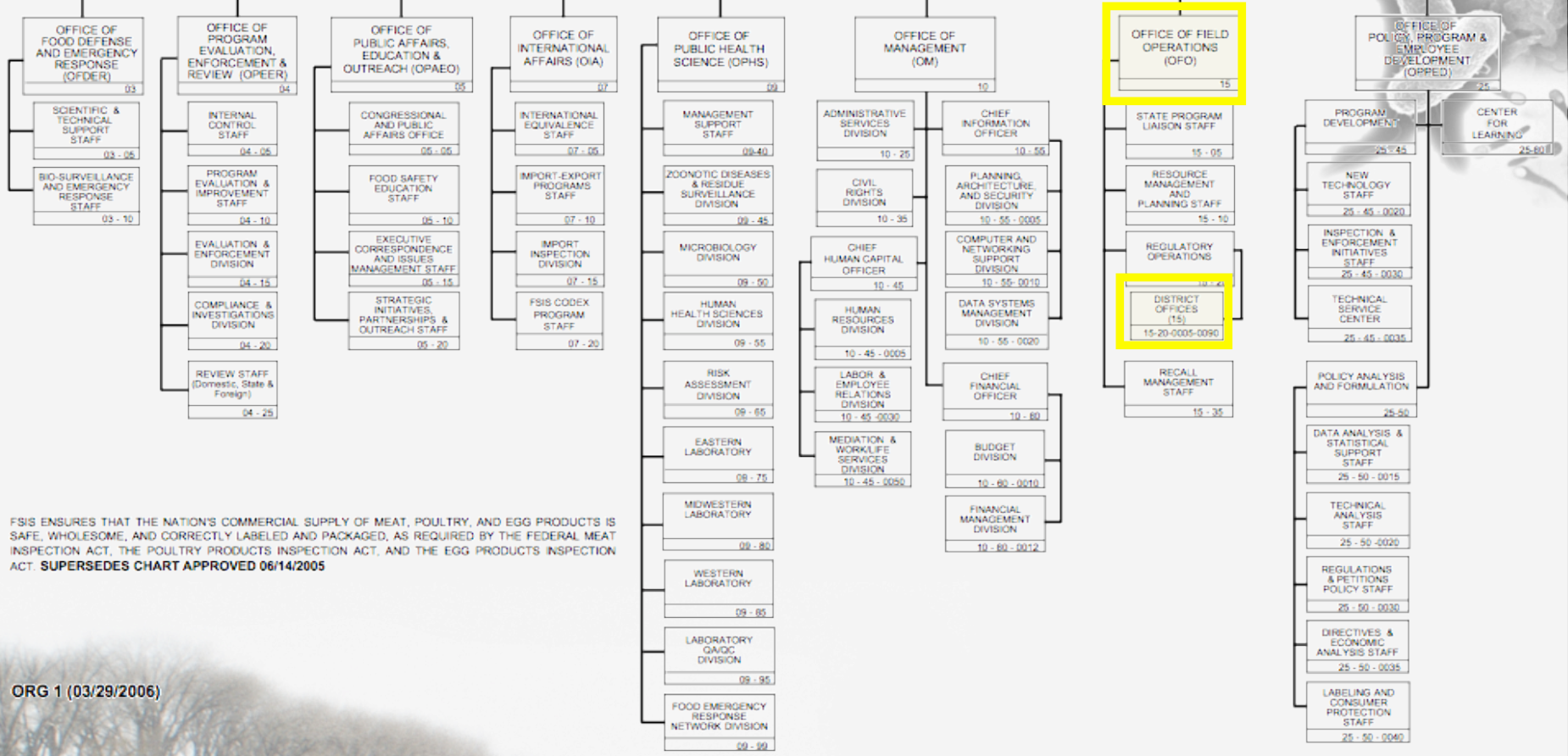

FSIS ENSURES THAT THE NATION'S COMMERCIAL SUPPLY OF MEAT, POULTRY, AND EGG PRODUCTS IS SAFE, WHOLESOME, AND CORRECTLY LABELED AND PACKAGED, AS REQUIRED BY THE FEDERAL MEAT INSPECTION ACT, THE POULTRY PRODUCTS INSPECTION ACT, AND THE EGG PRODUCTS INSPECTION ACT. **SUPERSEDES CHART APPROVED 06/14/2005**

ORG 1 (03/29/2006)

Other key players

- CSIs
  - William
  - George
  - Kenny
  - Bill
  - Paul
- EIAO
  - Lisa
- And many others!

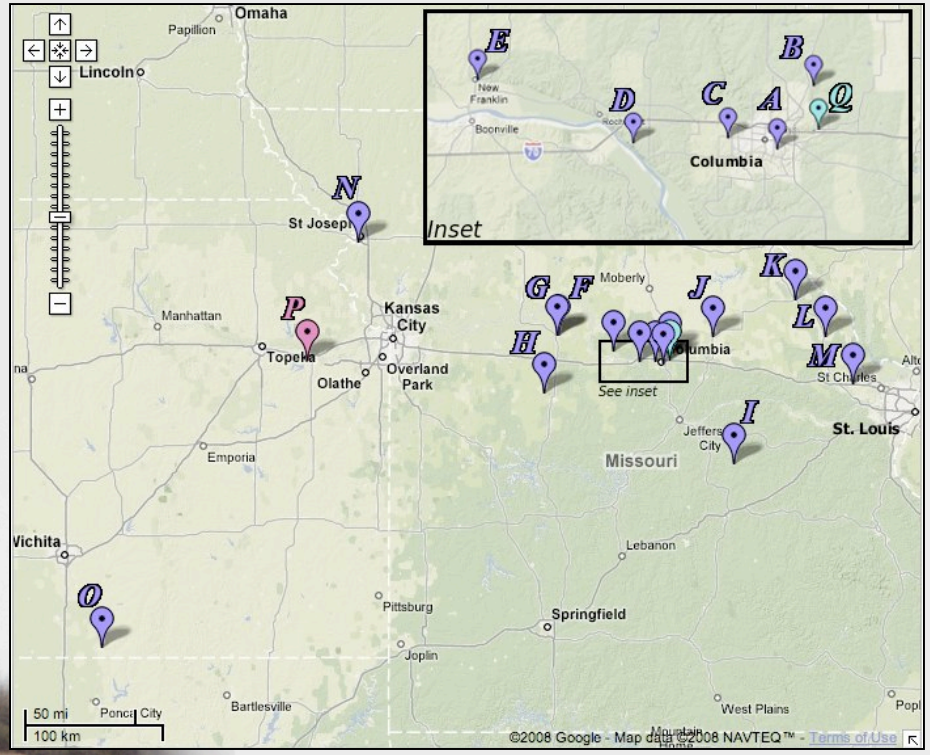

Where rubber meets road

- Congressional acts
- Regulations
  - Code of Federal Regulations
- Directives
- Notices
- Memoranda, etc

“Let the system work”

- On-line inspection
  - Every animal, every carcass
- Off-line inspection
  - The implementation of HACCP
- Checks and balances
  - FLS - agency consistency (fingers crossed)
  - EIAO - HACCP plan adequacy
  - Compliance - commerce

On-line inspection

- Food Inspectors (FI)
  - Pork
  - Chicken
  - Beef

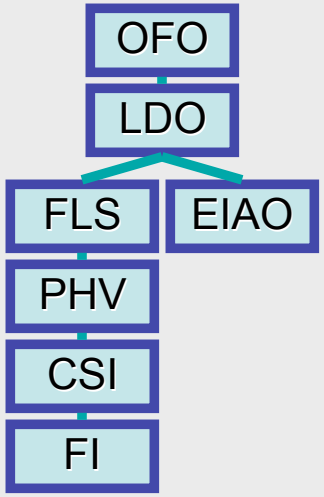

Off-line inspection

- Consumer Safety Inspectors (CSI)
  - Large vs. small/very small plants
- Public Health Veterinarians (PHV)
  - Mini-circuits
  - Dispositions

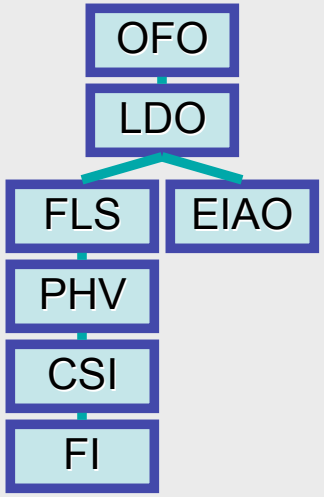

Checks and balances

- Frontline Supervisors (FLS)
  - Circuits
    - KS: 3
    - MO: 5
- Enforcement, Investigation and Analysis Officers (EIAO)
  - Food Safety Assessments (FSA)
- Compliance

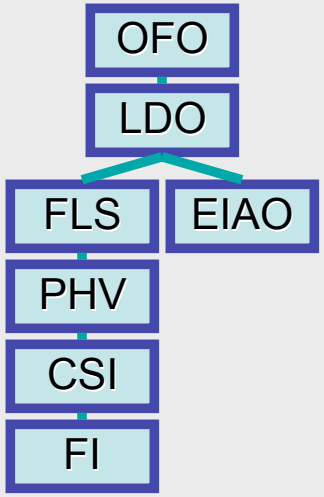

21st century FSIS

- Food safety
- Economic integrity (consumer protection)
- Humane handling
- Food defense

FIGHT BAC!
Keep Food Safe From Bacteria
TM

Food safety

- Biological
- Chemical
- Physical

Food safety: Biological (1)

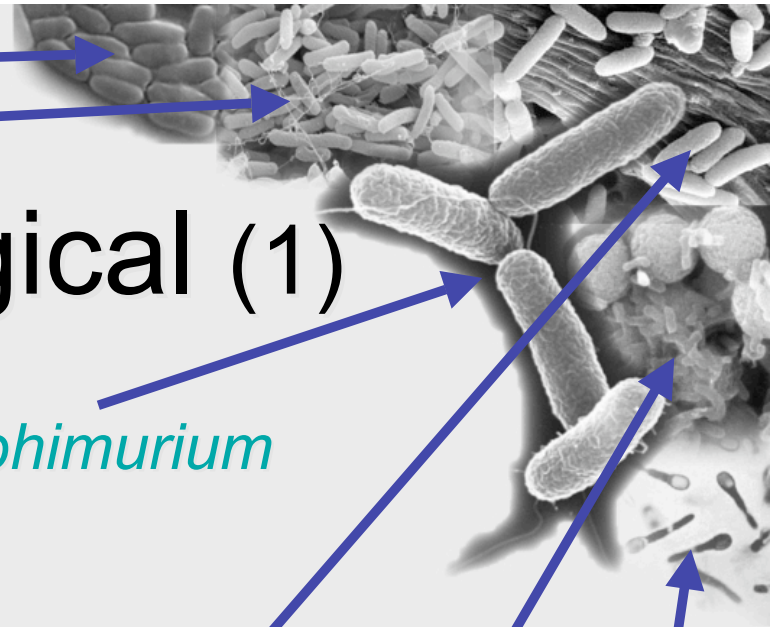

- Raw
  - *E. coli* O157:H7
  - *Salmonella* spp.
- Heat-treated but not fully cooked
  - *E. coli* O157:H7
  - *Salmonella* spp.
  - *Clostridium* spp.
- Ready to eat
  - *Listeria monocytogenes*
  - *Clostridium* spp.
  - *S. aureus*, *E. coli* O157:H7, *Salmonella* spp.
    - Also
      - *Campylobacter* spp.
      - *Yersinia* spp.

Food safety: Biological (2)

- Generic *E. coli* testing
- *E. coli* O157:H7 testing
- Routine *L. monocytogenes* testing

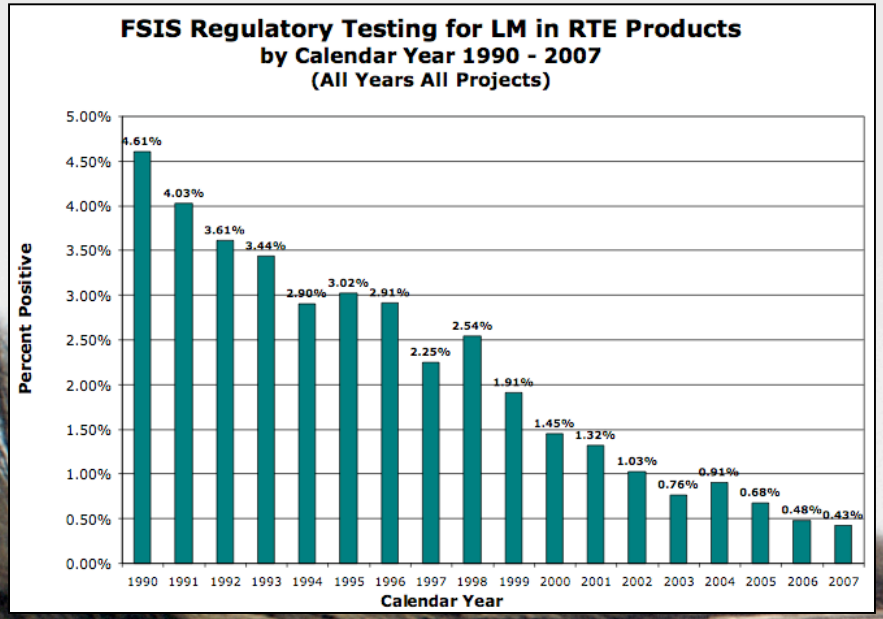

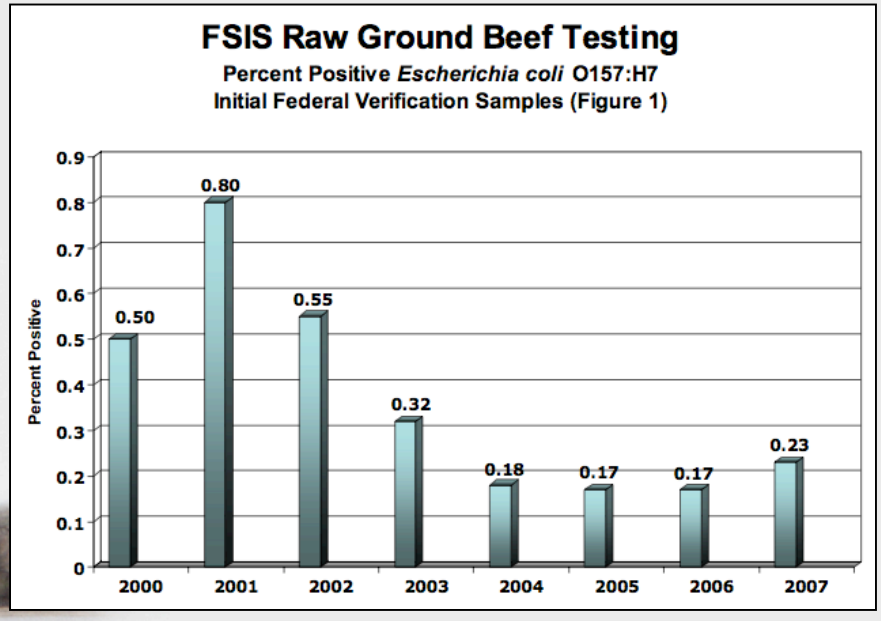

Food safety: Biological (3)

- Bovine spongiform encephalopathy
  - Disease of central nervous system
- UK outbreak began in 1988
  - Followed by rise in vCJD cases

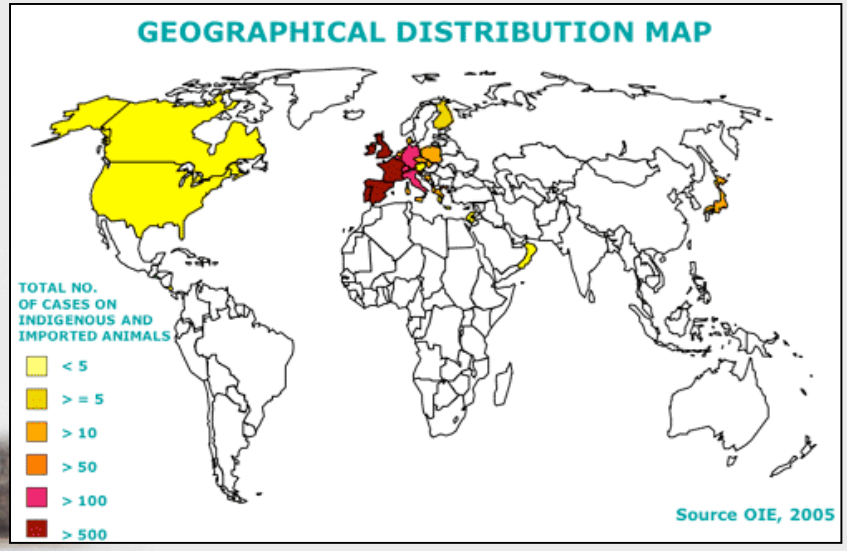

http://didgood.com/health/BSE/resources/bse-map3big.gif

Comparison of bovine spongiform encephalopathy and human vCJD cases in Great Britain from 1988 to present

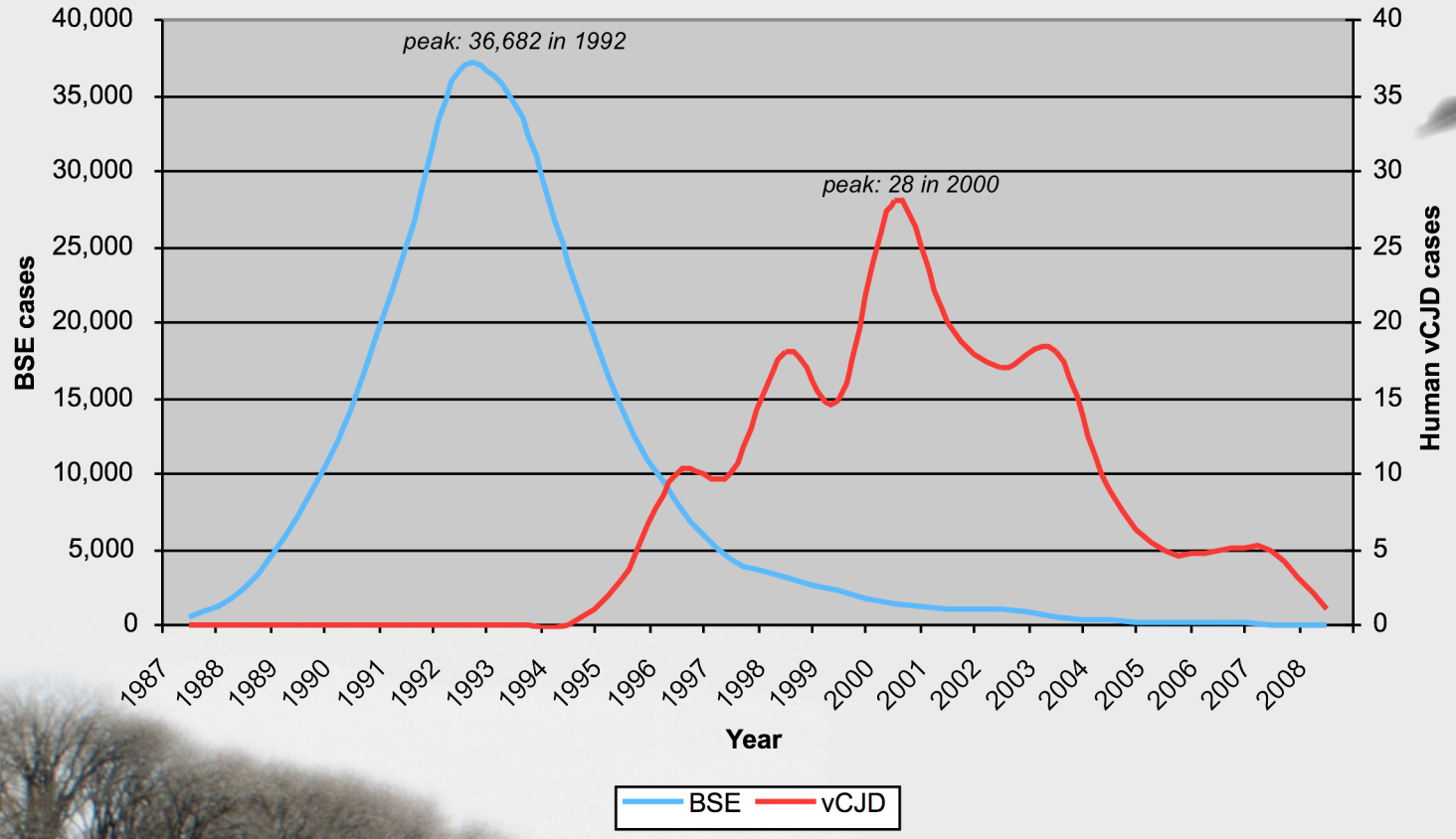

(sources: “Number of Cases”, “CJD Statistics”)

Food safety: Biological (4)

- As of 2003, all downer cattle are condemned
- Aging
  - Paperwork
  - Eruption of second set of incisors
- Other concerns:
  - Market heads
  - AMR

- Specified Risk Materials
  - All cattle
    - Distal ileum
    - Tonsils
  - Cattle ≥30 months old
    - Brain
    - Skull
    - Eyes
    - Trigeminal ganglia
    - Spinal cords
    - Vertebral column
    - Dorsal root ganglia

Food safety

- Biological
- Chemical
- Physical

Food safety: Chemical

- Cleaning agents and lubricants
- Allergens
- Residues
  - FAST/STOP testing

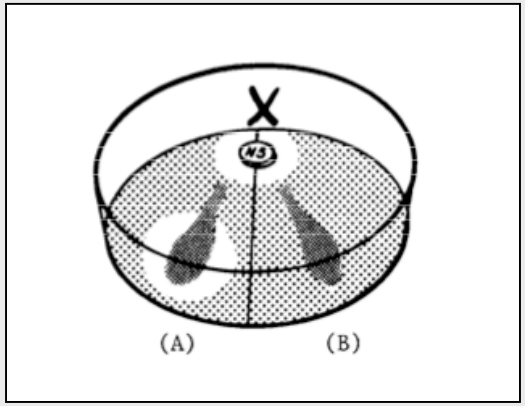

Food safety

- Biological
- Chemical
- Physical

Food safety: physical

- Pre-slaughter sources
- Post-slaughter and processing sources

21st century FSIS

- Food safety
- Economic integrity (consumer protection)
- Humane handling
- Food defense

FIGHT BAC!
Keep Food Safe From Bacteria
TM

Economic integrity

- Labeling
- Wholesomeness
  - Spoilage bacteria vs. foodborne pathogens

21st century FSIS

- Food safety
- Economic integrity (consumer protection)
- Humane handling
- Food defense

FIGHT BAC!
Keep Food Safe From Bacteria
TM

Humane handling

- Food and water
- Use of electric prods
- Slipping and falling
- Slaughter event
  - Slaughter effectiveness
  - Consciousness on rail
  - Religious slaughter
- Other issues
  - Porcine Stress Syndrome/Paylean

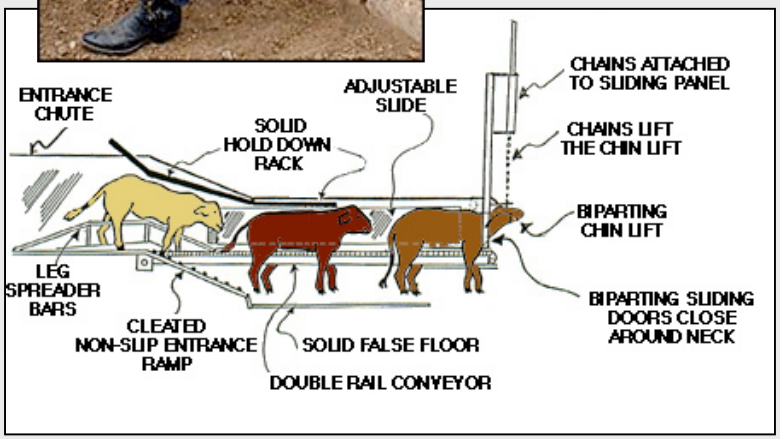

21st century FSIS

- Food safety
- Economic integrity (consumer protection)
- Humane handling
- Food defense

FIGHT BAC!
Keep Food Safe From Bacteria
TM

Food defense

- Meat processing
  - 08S procedures
    - Water systems
    - Processing/manufacturing
    - Storage areas
    - Shipping and receiving
- Food animal industry

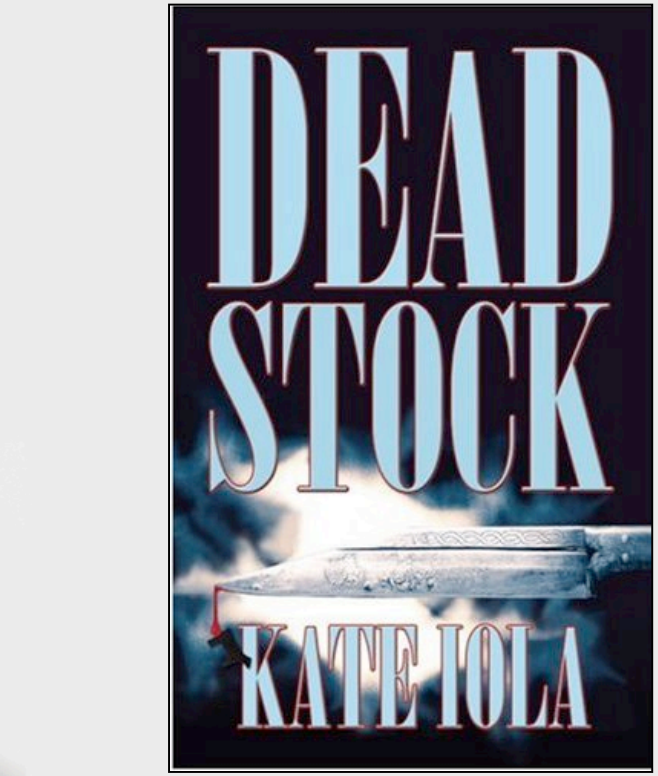

To recap…

- The task
  - Protect the US meat, poultry, and egg product supply
- The agency
  - USDA FSIS: one of several components of US food inspection
- The system
  - HACCP facilitated the transition from organoleptic inspection to scientifically-based safe food production

Master of Public Health

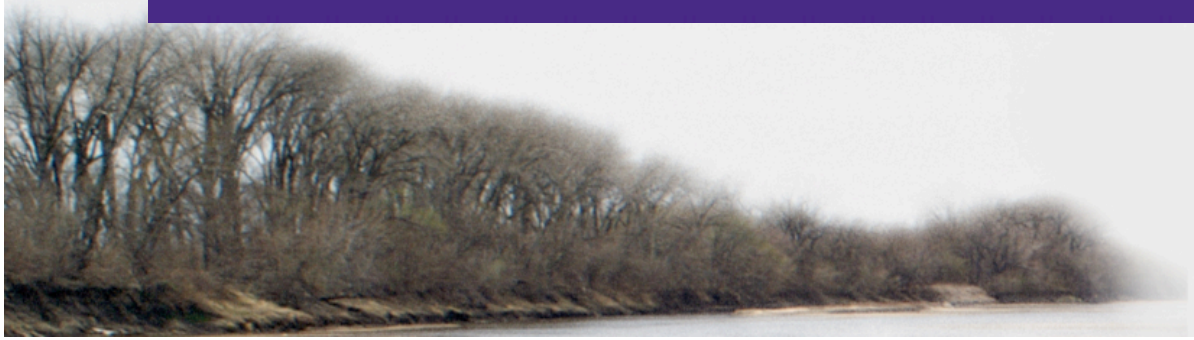

Bibliography (1)

- "Agency History." About FSIS. 10 Dec. 2007. USDA FSIS. 21 July 2008 <http://84www.fsis.usda.gov/About_FSIS/Agency_History/index.asp>.
- Acuff, Gary R. "Food Microbiology: Enforcement Investigation and Analysis Officer (EIAO) Education Program." USDA/FSIS. May 2004.
- Budras, Klaus-Dieter, and Robert E. Habel. Bovine Anatomy: an Illustrated Text. 1st ed. Hannover, Germany: SchluTersche, 2003.
- "CJD Statistics." The National Creutzfeldt-Jakob Disease Surveillance Unit (NCJDSU). 7 July 2008. University of Edinburgh. 21 July 2008 <http://www.cjd.ed.ac.uk/figures.htm>.
- Culp, Jason. "Toxin (Abridged)." By Robin Cook. Putnam Berkley Audio, 1998.
- Eamich, Amanda. United States. Food Safety and Inspection Service. United States Department of Agriculture. FSIS Recall Release: California Firm Recalls Beef Products Derived From Non-Ambulatory Cattle Without the Benefit of Proper Inspection. Congressional and Public Affairs, 2008.
- For the Welfare of Livestock. Perf. Temple Grandin. Human Resource Development Staff, FSIS, 1998.

Bibliography (2)

- Glavin, Margaret O'K. "A Single Microbial Sea: Food Safety as a Global Concern." SAIS Review 23.1 (2003): 203-220.
- Gould, SE. "The Story of Trichinosis." American Journal of Clinical Pathology 55 (1971): 2-11.
- Guidall, George. "The Jungle (Unabridged)." By Upton Sinclair. Recorded Books, 1995.
- Hurd, H. Scott, Jean Brudvig, James Dickson, Jovan Mirceta, Miroslava Polovinski, Neal Matthews, and Ronald Griffith. "Swine Health Impact on Carcass Contamination and Human Foodborne Risk." Public Health Reports 123 (2008): 343-351.
- Iola, Kate. Deadstock. 1st ed. Hartley, IA: Hammersmark Books, 2006.
- "Jack in the Box E. Coli Outbreak - Western States." Marler Clark, Attorneys At Law LLP, PS. 21 July 2008 <http://www.marlerclark.com/case_news/view/jack-in-the-box-e-coli-outbreak-western-states>.
- Kastner, J J., and R K. Pawsey. "Harmonising Sanitary Measures and Resolving Trade Disputes Through the WTO-SPS Framework. Part II. a Case Study of the US-Australia Determination of Equivalence in Meat Inspection." Food Control 13 (2002): 57-60.

Bibliography (3)

- Kastner, Justin. "Food Safety and Security - From the 'Jungle' to the Plains." Lifelines 1.6 (2006): 3.
- Musser, Jeffry M B. "A Practitioner's Primer on Foot-and-Mouth Disease." JAVMA 224.8 (2004): 1261-1268.
- "Number of Cases of Bovine Spongiform Encephalopathy (BSE) Reported in the United Kingdom." OIE: World Animal Health Situation. 17 Apr. 2008. OIE - World Organisation for Animal Health. 21 July 2008 <http://www.oie.int/eng/info/en_esbru.htm>.
- "Number of Reported Cases of Bovine Spongiform Encephalopathy (BSE) in Farmed Cattle Worldwide*(Excluding the United Kingdom)." OIE: World Animal Health Situation. 16 July 2008. OIE - World Organisation for Animal Health. 21 July 2008 <http://www.oie.int/eng/info/en_esbmonde.htm>.
- "Porcine Stress Syndrome (PSS)." ThePigSite Quick Disease Guide. 5M Enterprises Ltd. 21 July 2008 <http://www.thepigsite.com/diseaseinfo/89/porcine-stress-syndrome-pss>.
- Salmonellosis. Ames, IA: Center for Food Security and Public Health, College of Veterinary Medicine, Iowa State University, 2005.

Bibliography (4)

- Stevenson, Kenneth E., and Dane T. Bernard, eds. HACCP: a Systematic Approach to Food Safety. 3rd ed. Washington, D.C.: The Food Processors Institute, 1999.
- Taylor, Jared D. "What Practitioners Should Know About Bovine Spongiform Encephalopathy to Serve Clients and the Cattle Industry." JAVMA 227.7 (2005): 1070-1078.
- Trichinellosis Fact Sheet for the General Public. Centers for Disease Control and Prevention.
- United States. Food Safety and Inspection Service. United States Department of Agriculture. Appendix B: Compliance Guidelines for Cooling Heat-Treated Meat and Poultry Products (Stabilization). June 1999. 21 July 2008 <http://www.fsis.usda.gov/oa/fr/95033F-b.htm>.
- United States. Food Safety and Inspection Service. United States Department of Agriculture. Entry Training for PHV. 2007.
- United States. Food Safety and Inspection Service. United States Department of Agriculture. FSIS Directive 5000.1 Rev 3: Verifying an Establishment's Food Safety System. 2008.

Bibliography (5)

- United States. Food Safety and Inspection Service. United States Department of Agriculture. FSIS Directive 5100.1 Rev 2: Enforcement, Investiations, and Analysis Officer (EIAO) Comprehensive Food Safety Assessment Methodology. 2008.

- United States. Food Safety and Inspection Service. United States Department of Agriculture. FSIS Directive 5100.1 Rev 2: Enforcement, Investiations, and Analysis Officer (EIAO) Comprehensive Food Safety Assessment Methodology. 2008.

- United States. Food Safety and Inspection Service. United States Department of Agriculture. FSIS Directive 6100.1: Ante-Morten Livestock Inspection. 2007.
- United States. Food Safety and Inspection Service. United States Department of Agriculture. FSIS Directive 6100.4: Verification Instructions Related to Specified Risk Materials. 2007.
- United States. Food Safety and Inspection Service. United States Department of Agriculture. FSIS Notice 40-08: Nationwide Young Turkey Microbiological Baseline Data Collection Program - Update. 2008.
- United States. Food Safety and Inspection Service. United States Department of Agriculture. FY2008-2013 Strategic Plan.
- Vacher, Francis. "The Transmission of Disease by Food." British Medical Journal (1882).