A STUDY OF THE SPIN OF THE FIFTH AND SIXTH EXCITED STATES OF ^{39}K

by 4589

THOMAS R. WITTICK

B. S., Wheaton College, 1968

A MASTER'S THESIS

submitted in partial fulfillment of the

requirements for the degree

MASTER OF SCIENCE

Department of Physics

KANSAS STATE UNIVERSITY
Manhattan, Kansas

1970

Approved by:

G. G. Seaman
Major Professor

LD
2668
T4
1970
W577
C.2

TABLE OF CONTENTS

Introduction..... 1

Angular Correlation Theory..... 3

Particle-Gamma Coincidence Method..... 9

Data Analysis..... 17

Results and Conclusions..... 21

Appendix I..... 33

Appendix II..... 48

Bibliography..... 49

Acknowledgements..... 50

THIS BOOK CONTAINS NUMEROUS PAGES WITH DIAGRAMS THAT ARE CROOKED COMPARED TO THE REST OF THE INFORMATION ON THE PAGE.

THIS IS AS RECEIVED FROM CUSTOMER.

INTRODUCTION

A great deal of interest centers around nuclei near closed shells because of the apparent simplicity of the level structure and theoretical descriptions. In particular, the low-lying excited states of nuclei neighboring the doubly-closed shell nucleus, ^{40}Ca, have been studied up to excitation energies of about 5 MeV (or higher in some cases); however, in many of these nuclei, including ^{39}K, the spins of the excited states are known only for afew levels. This thesis describes an attempt to determine spins for more states in ^{39}K in order to allow more complete comparison of the level structure with the existing theoretical calculations.

An experiment was performed with the reaction $^{39}K(p,p'\gamma)$ in order to determine the spin of the fifth and sixth excited states of ^{39}K. The experiment employed an angular correlation technique in order to determine the above mentioned spins. An angular correlation of gamma rays in coincidence with particles was observed which had certain Δm transfers selected out due to the arrangement of the detectors. These distributions were compared to theoretical angular correlations by means of a chi-squared analysis. This analysis determined the most likely spin and mixing ratio for the states under consideration.

Work had been done previously on this nucleus by Lopes, Robertson, Gill, Bell, and Rose.[1] They were unable to make definite spin assignments to the fifth and sixth states and were

only able to say that the spin of the fifth state is either 3/2 or 5/2 and the spin of the sixth state is 5/2 or 7/2. Lopes et al carried out their work using a sodium-iodide detector to observe gamma rays. Since large lithium-drifted germanium detectors are now available with higher resolution for detecting gamma rays, it was felt that it might be possible to make a better measurement of the gamma-ray angular correlation and thus determine the spin of the fifth and sixth excited states. This thesis reports the results of this attempt.

ANGULAR CORRELATION THEORY

The emission-direction probability distribution of a gamma ray depends on the direction of nuclear spin. If the target nuclei are excited so that all nuclear spin orientations are equally probable, the radiation given off will be isotropic; however, if it is possible to select nuclei whose spins are oriented in one direction, or which have a higher probability of orientation in one direction rather than in any other, then the radiation they emit will be anisotropic and the resulting distribution will give information about the nuclear spin.

This particular experiment, which involved the reaction $^{39}K(p,p'\gamma)$, used the outgoing proton to select a certain ensemble of nuclei with spins in the same direction. This was accomplished by using an annular detector to detect protons near 180° to the beam direction. The gamma rays that were detected in coincidence with protons were given off by nuclei which had radiated a proton near 180°. As will be shown below, this procedure selected certain Δm transfers, and thus it selected nuclear spins with non-uniform distributions which led to an anisotropic distribution of gamma-ray emission.

In order to understand the angular correlation process one must first consider a single gamma-ray transition where the gamma ray has angular momentum $\underline{L}$ and the initial and final states of the nucleus have spins $\underline{I}_i$ and $\underline{I}_f$, and $\underline{I}_i=\underline{I}_f+\underline{L}$. The projection of $\underline{L}$ on any quantization axis (call it the Z axis) is L_z, and the

associated magnetic quantum number is M, where $L_z=M\hbar$. $m_i=m_f+M$ for each transition. Thus m_i and m_f are the magnetic substates of the nucleus before and after the transition. Each transition $m_i \rightarrow m_f$ has its own characteristic angular distribution $G_L^M(\theta)$ where θ is the angle between the gamma ray and the quantization axis; however, the level splitting (nuclear Zeeman effect) is so small that in most cases gamma-ray components are unobservable and one can only see an unresolved line. In order to calculate the total angular distribution, $G_L(\theta)$, for this transition one must know the initial population parameter, $P(m_i)$, for each sub-level, the transition probability of going from $m_i \rightarrow m_f$, $T(m_i,m_f)$, and the distribution function for each m transition; thus

$$G_L(\theta) \propto \sum_{m_i m_f} P(m_i) T(m_i,m_f) G_L^M(\theta). \qquad (1)$$

The Wigner-Eckart theorem can be used to separate $T(m_i,m_f)$ into a nuclear factor and a geometrical factor. The nuclear factor is a function of nuclear properties, but not m_i or m_f. The geometrical factor contains the m dependence and thus is the relative transition probability. From the Wigner-Eckart theorem:

$$\langle I_f m_f | T_L | I_i m_i \rangle = \langle I_f m_f LM | I_i m_i \rangle \langle I_i \| T_L \| I_f \rangle \qquad (2)$$

where $\langle I_f m_f LM | I_i m_i \rangle$ is a Clebsch-Gordon coefficient and $\langle I_i \| T_L \| I_f \rangle$ is a reduced matrix element. One can see that $\langle f | Op | i \rangle$ is proportional to $\langle I_f m_f LM | I_i m_i \rangle$; therefore, the relative transition probability can be defined as:

$$T(m_1 m_2) = |\langle I_f m_f LM | I_i m_i \rangle|^2. \qquad (3)$$

Consider now a gamma-gamma cascade $I_i \rightarrow I \rightarrow I_f$ where there is an intermediate state involved. Assume that the quantization

axis corresponds to the direction of emission of the first gamma ray. Thus $W(\theta)$, the angular correlation, corresponds to $G_L(\theta)$ for the second gamma ray. In order to know $P(m)$ for the intermediate state the transitions $m_i \rightarrow m_f$ must be known. Thus

$$P(m) \propto \sum_{m_i} T(m_i, m) G_L^M(\theta) \qquad (4)$$

where all initial states are assumed equally populated.

Because of the quantization axis chosen for the first gamma ray, its angular momentum must be either $+\hbar$ or $-\hbar$ so $M_1 = \pm 1$.[3] When combined, all of these results yield the following:

$$W(\theta) \propto \sum_{m_f m m m_i} \langle I m L_1 \pm 1 | I m_i \rangle^2 G_L^{\pm 1}(0) \langle I_f m_f L_2 M_2 | I m \rangle^2 G_{L_2}^{M_2}(\theta). \quad (5)$$

The development of this formula has presented a physically understandable picture of angular correlation analysis; however, it has limitations because of the difficulty in experimentally measuring the factors. Fraunfelder and Steffen have done a rigorous development of this formula and have reduced it into a form which can be measured.[4] This thesis will deal only with the key points in their development in order to arrive at the formulae used in this experiment.

To start with, one considers an angular correlation function between the directions of the emission of the two gamma rays. These directions are represented by the wave vectors $\underline{k}_1$ and $\underline{k}_2$. The correlation function is

$$W(\underline{k}_1, \underline{k}_2) = \sum_{m m'} \langle m | \rho(\underline{k}_1) | m' \rangle \langle m' | \rho(\underline{k}_2) | m \rangle \qquad (6)$$

where $\langle m | \rho(\underline{k}) | m' \rangle$ is a density matrix. See appendix II for a discussion of the density matrix. (Equations 7-10 of the text appear as Equations 1-4 of appendix II.)

The $\langle m|\rho(\underline{k})|m'\rangle$ matrix elements can be expanded into a series of Clebsch-Gordon coefficients, reduced matrix elements, and a rotation matrix. The elements of the rotation matrix are defined as $D^{L}_{\mu M}=\langle\mu|D^{L}|M\rangle$ and the representation for the matrix is $D^{L}_{\mu M}(\underline{k}\rightarrow\underline{Z})$. The argument $(\underline{k}\rightarrow\underline{Z})$ stands for the Euler angles which translate the $\underline{k}$ coordinate system with associated magnetic quantum number μ over into the $\underline{Z}$ coordinate system with magnetic quantum number M. From Equation 6 one can see that $W(\underline{k}_1,\underline{k}_2)$ involves a product of two rotation matrices. This product can be expressed as

$$D^{L}_{\mu M}D^{L'}_{\mu' M'}=\sum_k\langle L\mu L'\mu'|k\gamma\rangle\langle LML'M'|kN\rangle D^{k}_{\gamma N} \qquad (11)$$

where $N=M+M'$, $\gamma=\mu+\mu'$ and k runs from $|L-L'|$ to $L+L'$. The index k should not be confused with the wave vector $\underline{k}$. For the special choices of quantum numbers where $\gamma=0$ and $N=0$

$$D^{L}_{00}(\gamma\theta\gamma)=P_L(\cos\theta). \qquad (12)$$

This is due to the fact that for an axially symmetric counter there is no γ dependence and if the counter is at $\gamma=0^{\circ}$ or 180° then the rotation matrix element reduces to a Legendre polynomial. From this point it follows that $W(\underline{k}_1,\underline{k}_2)$ can be represented by $W(\theta)$ where θ is the angle between $\underline{k}_1$ and $\underline{k}_2$ and

$$W(\theta)=\sum_{\substack{k\\ \text{even}}}a_kP_k(\cos\theta). \qquad (13)$$

Because of the conservation of parity the index k is only even for measurements in the direction of the radiations.[6] Thus it is possible to represent an angular correlation function in terms of a sum of even order Legendre polynomials multiplied by appropriate constants.

By considering the conservation of angular momentum it follows that detecting only particles which are emitted along the beam axis limits the magnetic substates which can be populated to the sum of the spins of the incident particles, emitted particle, and the target nucleus.[5] This result is a direct consequence of the fact that the orbital angular momentum of a plane wave in the direction of the quantization axis has no projection on the axis.

To go from a gamma-gamma correlation to a particle-gamma correlation, the initial gamma ray is replaced by a scattered proton. The coefficients a_k have been determined by Poletti and Warburton for this situation. Poletti and Warburton have broken the a_k coefficients up into three factors so that:

$$W(\theta)=\sum_k a_k P_k(\cos\theta)=\sum_k \rho_k(a) F_k(a,b) Q_k P_k(\cos\theta) \qquad (14)$$

where one considers a state with spin a and magnetic quantum numbers α decaying to a state b.[2] The index k runs from 0 to 2a for all even integer values of k. The $\rho_k(a)$ are statistical tensors which describe the alignment of state a, $F_k(a,b)$ depend on the gamma-ray cascade and do not depend on alignment, and Q_k are attenuation coefficients for the detector. The Q_k factors account for the fact that the detector subtends a finite solid angle as seen by the source. Q_k is defined to be less than one whenever the detector subtends a finite solid angle.

$$\rho_k(a)=\sum_\alpha \rho_k(a,\alpha) P(\alpha) \qquad (15)$$

where the values of $\rho_k(a,\alpha)$ for a=3/2 to 11/2 are listed by

Poletti and Warburton and $P(\alpha)$ are the population parameters for the magnetic substates α. It was assumed that $P(1/2)$ and $P(3/2)$ were very densely populated states; therefore, $P(1/2)+P(-1/2)+P(3/2)+P(-3/2)\approx 1$ and these were the only values of α considered. The $F_k(a,b)$ terms are given by

$$F_k(a,b)=\sum_{LL'} i^{L'-L+\pi-\pi'} x_L x_{L'} F_k(LL'ba)/\sum_i x_i^2. \qquad (16)$$

As is customary, only the two lowest allowed multipolarities were considered since contributions from higher order multipoles than the two lowest ones allowed by angular momentum and parity selection rules are negligible. Therefore Equation 16 reduces to:

$$F_k(a,b)=\left[F_k(LLba)-2xF_k(LL'ba)+x^2F_k(L'L'ba)\right]/(1-x^2) \qquad (17)$$

where L is the lowest allowable value, $L'=L+1$, and the mixing ratio, $x=\langle b\|L+1\|a\rangle/\langle b\|L\|a\rangle$. The values for $F_k(LLba)$ are given by Poletti and Warburton for a and b between 3/2 and 11/2.

Equation 14 was used as the general expression for the angular correlation, and the coefficients were calculated using the method described above. A computer program was written to make a calculation of the theoretical angular distribution, $W(\theta)$ (see appendix). The program calculated $W(\theta)$ for varying values of θ and mixing ratio (x). Of course, the initial and final spins could also be varied. The data obtained from the experiment were properly normalized and compared to the $W(\theta)$ values calculated for various x and θ values using a chi-squared analysis. This analysis was similar to a least-squares fit in that it told which values of the parameters of $W(\theta)$ best fit the experimental data. Determination of the best fit to $W(\theta)$ gave the spin of the state since $W(\theta)$ is a function of the spin.

PARTICLE-GAMMA COINCIDENCE METHOD

A target of approximately 250 $\mu gm/cm^2$ of potassium-iodide (KI) on a 20 $\mu gm/cm^2$ carbon foil backing was used for this experiment. Because of the use of the coincidence electronics, gamma rays from impurities were unobservable in the final spectrum and it was necessary only to be concerned with gamma rays from ^{41}K. Since the abundance of the ^{41}K was only 6.88% as compared to 93.1% from ^{39}K, the gamma rays from ^{41}K were too few to influence this particular measurement.

The proton beam was supplied by the 12 MeV Tandem Van de Graaff accelerator at Kansas State University. The machine was tuned to supply about three nanoamps of well collimated beam at an energy of 6.71 MeV. This energy was determined by taking an excitation function as will be described below.

The target was housed in a chamber and was held in the path of the beam by a target holder which was capable of positioning any of three targets in the beam path (see Plate I). Just before entering the target chamber the beam went through a 1/16 inch slit. As it entered the target chamber it passed through the center hole of the particle detector. By using this arrangement particles scattered between 164° and 174° to the direction of the beam were detected by the particle detector. Outside of the target chamber the gamma-ray detector (Ge(Li)) was set at a distance of 8.86 cm. from the center of the target and was on a movable stand so that it could detect gamma rays coming

EXPLANATION OF PLATE I

Top view of the target chamber showing the position of the particle detector and one position of the Ge(Li) detector. This detector was moved to various angles between 30° and 90°.

PLATE I

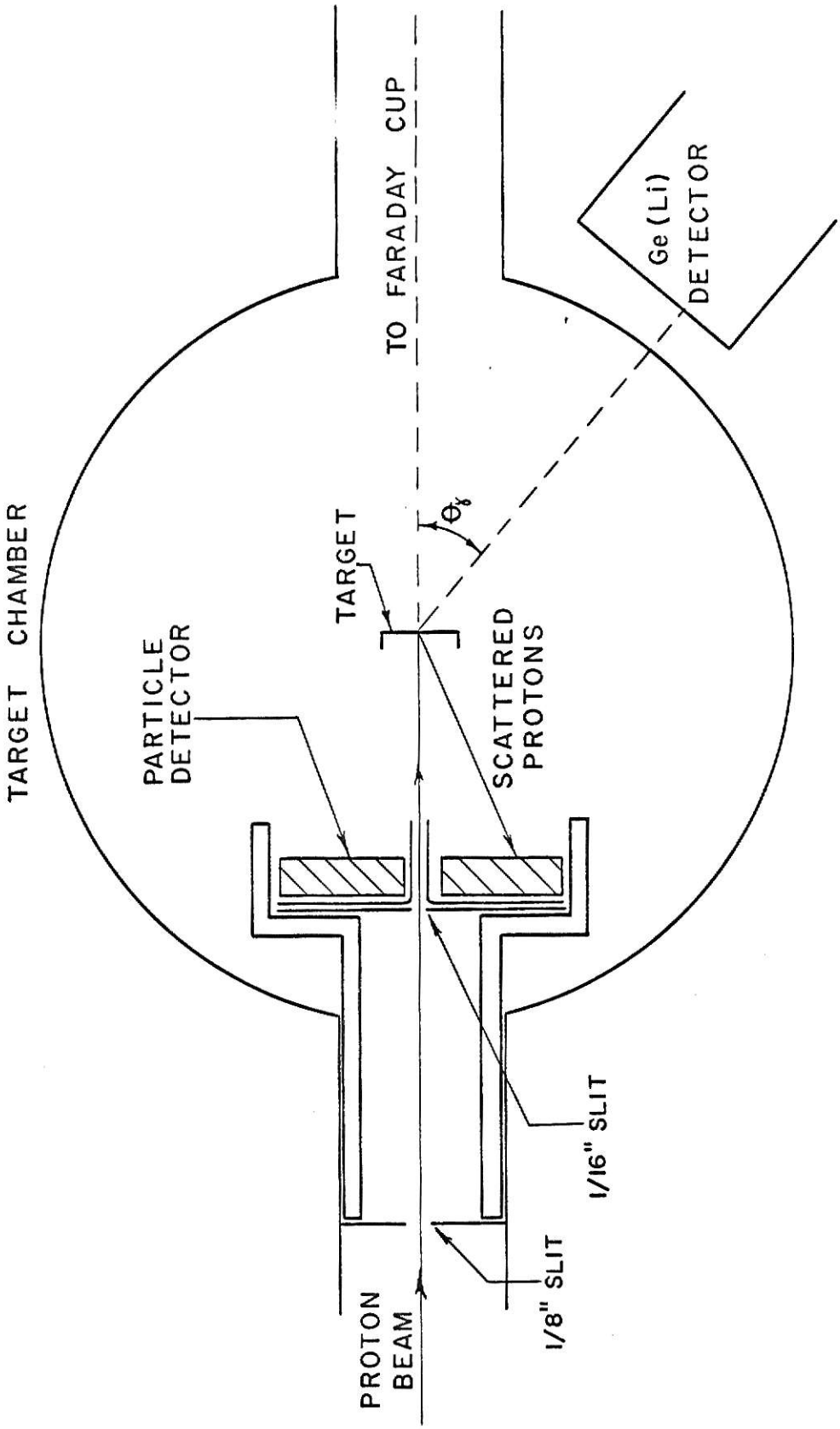
TARGET CHAMBER
PARTICLE DETECTOR
TARGET
θ_γ
TO FARADAY CUP
Ge (Li) DETECTOR
SCATTERED PROTONS
1/16" SLIT
1/8" SLIT
PROTON BEAM

from the target at various angles.

The detector used to observe particles was a Princeton Gamma-Tech, Inc. surface barrier detector with an active area of 300 mm^2 and a thickness greater than 500 μ. The bias on the detector was 50 volts. The hole in the center of the detector was 1/8 inch in diameter and allowed the beam to pass through without being detected.

The gamma-ray detector was a Nuclear Diodes, Inc. lithium-drifted germanium detector, Ge(Li). It had a coaxial cylindrical crystal 4.1 cm. in diameter. The center hole was 1.1 cm. in diameter, and the length of the crystal was 2.6 cm. The bias placed on the detector was -2250 volts.

The arrangement of the coincidence electronics used is diagrammed in Plate II. The particle pulse came from the annular particle detector and was sent to the stop side of the time-to-analog converter (TAC) through a discriminator (DISC) which eliminated low energy pulses. The start side of the TAC was fed by pulses from the Ge(Li) detector. The TAC would produce a pulse whose amplitude was proportional to the time difference between the start and stop pulses provided they were within 0.2 μsec of each other. If this was not the case then no pulse would be generated. Since most of the coincidences were true the TAC spectrum showed a sharp peak for these coincidences; however, there was a possibility that a particle and a gamma ray could have entered the system in such a way as to cause the TAC to give an output without there being a true coincidence. This random

EXPLANATION OF PLATE II

Block diagram of the coincidence electronics employed.

AMP=Amplifier
4X=Amplifier multiplies signal 4 times
DISC=Discriminator
SCA=Single channel analyzer
PREAMP=Preamplifier
TAC=Time-to-analog converter
L S AND D=Logic shaper and delay
ADC=Analog-to-digital converter

PLATE II

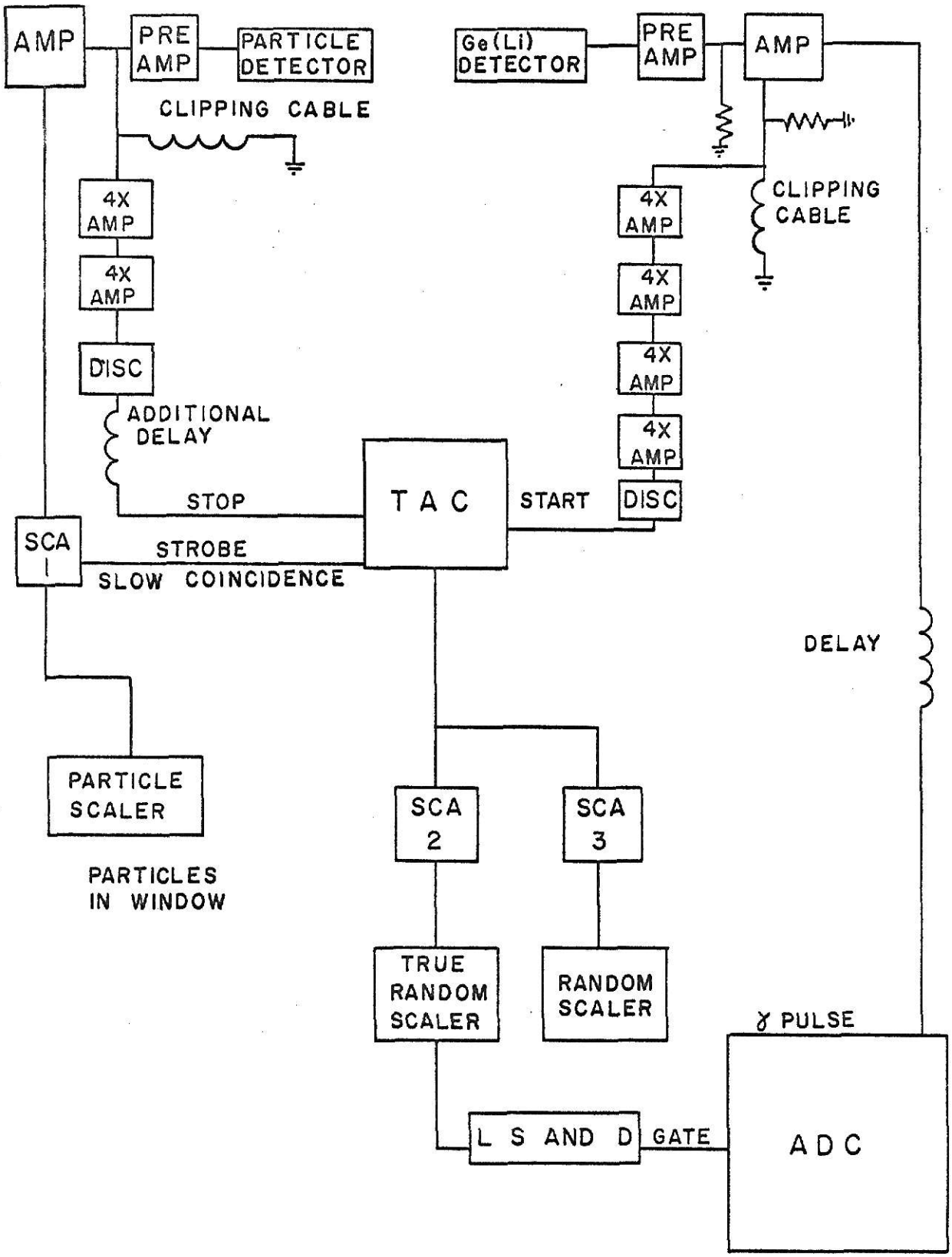
AMP
PRE AMP
PARTICLE DETECTOR
CLIPPING CABLE
4X AMP
4X AMP
DISC
ADDITIONAL DELAY
STOP
SCA 1
STROBE
SLOW COINCIDENCE
PARTICLE SCALER
PARTICLES IN WINDOW
Ge(Li) DETECTOR
PRE AMP
AMP
CLIPPING CABLE
4X AMP
4X AMP
4X AMP
4X AMP
DISC
T A C
START
DELAY
SCA 2
SCA 3
TRUE RANDOM SCALER
RANDOM SCALER
γ PULSE
L S AND D
GATE
A D C

signal was in the background of the TAC spectrum and ran the length of the spectrum including the region under the peak. When a particle came into the particle detector it was also amplified and then analyzed by the single channel analyzer (SCA 1). If the particle was within the window of the analyzer, which was set on the fifth and sixth states, the particle scaler was incremented and a signal was sent to the strobe input of the TAC. This was the slow coincidence part of the circuit which triggered the fast coincidence circuit if the pulse actually was from either the fifth or sixth state. SCA 2 was tuned to the peak of the TAC spectrum and SCA 3 was tuned to an equal voltage range of background in the spectrum so the scalers connected to these analyzers counted true plus random coincidences and random coincidences respectively. The true plus random pulses gated the analog-to-digital converter (ADC) of the 4096 channel multichannel analyzer which analyzed the energy of the pulses from the Ge(Li) detector.

The experiment itself consisted first of measuring an excitation function for energies between 6.10 MeV and 8.50 MeV in 20 KeV intervals. There was a large fluctuation in the intensities of the various states. For example, the intensity of the fifth state changed by a factor of five over this region. In this way the energy which gave the greatest intensity of the fifth and sixth states was selected. Five ten-hour runs were taken with the gamma-ray detector set at angles of 30°, 45°, 55°, 75°, and 90°. The determination of the length of each run was

that each was to have a particle count (SCA 1) of about 20,000,000 particles, and this took about ten hours per run. Gamma singles spectra were taken at the beginning and end of the experiment. These were simply spectra from the Ge(Li) detector without the coincidence requirement and were used to measure the relative intensity of the various gamma peaks. The single channel analyzers were checked throughout the experiment to insure that the windows were remaining open to the portions of the respective spectra desired.

DATA ANALYSIS

Data from the multichannel analyzer were plotted and peaks of known energy in the spectrum, along with single and double escape peaks, were used to calibrate the spectra. The peaks that were analyzed were the 3.94 MeV full energy and double escape, 3.88 MeV full energy and double escape, 1.33 MeV, and 1.15 MeV. The width of each energy peak was kept constant over the five angles and a value for the background was obtained using a straight line approximation. Since each run had a different particle count (in the range of 20,000,000) it was necessary to multiply the counts under each peak by an appropriate factor for each run in order to normalize all of the runs to the same scale.

Corrections were made for the random counts which were unavoidably observed. The correction was made by solving the following for x:

$$\frac{T+R}{R}=\frac{C_a}{xC_s} \qquad (18)$$

where T=true counts read from the scaler, R=random counts, C_a= total number of counts in the analyzer for a given run, and C_s= total number of counts in the singles spectrum. The correction for each peak was then the number of counts in that same peak in the singles spectrum multiplied by x. This term was subtracted from the number of counts under the peak of interest. The error in the experiment was $\pm\sqrt{N}$ where N was the number of counts under any given peak. The error in the determination of the background was negligible as compared to $\pm\sqrt{N}$ and therefore it was

omitted from the data analysis.

In this analysis the attenuation factors for the Ge(Li) detector (Q_k) were set equal to one. This was done on the basis of the results of Black and Gruhle.[7] Their calculations were performed using a cylindrical crystal so that the geometry they encountered was the same as that for the detector used in this experiment. The data in this article showed that as the distance of the crystal from the source of gamma rays increased, the Q_k value (where k was even) approached one. As the energy of the gamma ray increased Q_k increased and approached one. The largest values given for both of these parameters were smaller than the values obtained from the detector used in this experiment; therefore, the increase of these parameters tended to bring the value of Q_k closer to one. From the values which had been calculated for Q_k ($Q_k=J_2/J_o$ or J_4/J_o), it was evident that $Q_k \approx 1$ and with the addition of the above mentioned effects it was assumed that $Q_k=1$.

The data were analyzed by means of a least-squares fit to a series of even order Legendre polynomials in order to obtain a theoretical fit for the data and also to find a normalization factor for the chi-squared analysis. The Fortran IV computer program used for this is listed in the appendix. The computer used for all of the calculations in this experiment was the IBM 360/50 at Kansas State University. The program was run with a value $K_{max}=4$ because, as will be seen from the results of the experiment, it was consistant with the selection rule $K \leq 2L$ where

L was the spin of the initial state. The values generated by the least-squares program fell well within the error bars on the data points.

A second and important use of the least squares information was that it determined a normalization constant which was necessary in order to compare the experimental data with the theoretical angular correlation. Let $Y(\theta)$ equal the experimentally determined angular correlation. Then

$$Y(\theta)=A_0+A_2P_2(\cos\theta)+A_4P_4(\cos\theta)+\cdots \qquad (19)$$

A_0 was factored out of this expression so

$$\begin{aligned} Y(\theta)&=A_0\left[1+(A_2/A_0)P_2+(A_4/A_0)P_4+\cdots\right] \\ &=A_0\left[1+a_2P_2+a_4P_4+\cdots\right]. \qquad (20) \end{aligned}$$

The expression in the brackets was of the same from as the theoretical expression for the theoretical angular correlation

$$W(\theta)=1+a_2P_2+a_4P_4+\cdots. \qquad (21)$$

Therefore the A_0 term as determined by the least-squares analysis was the normalization factor used to normalize the experimental data so it could be compared with the theoretical angular correlation function.

The final analysis performed on the data was a chi-squared analysis. The general formula for this analysis is in the appendix. There were three degrees of freedom in this experiment since σ=N-2 where N is the number of angles at which data were taken.[2] This analysis method compared two sets of values and the more nearly they agreed the lower the chi-squared value. The method was used in this experiment to compare the normalized

data to the theoretical angular distribution, $W(\theta)$. When calculating $W(\theta)$ the population parameters, P(1/2) and P(3/2), and the mixing ratio, x, ($x=\langle f|L+1|i\rangle/\langle f|L|i\rangle$, where L is the lowest allowed angular momentum for the gamma ray) were varied in an attempt to find the smallest chi-squared value possible. Rather than take values of x, arctan x was used because it was a slowly varying function between 90° and -90°. The lowest value of chi-squared for one gamma ray thus determined the spin of the initial state and the mixing ratio for the transition.

Three seperate computer runs were made using the chi-squared program. The first run was a coarse run in which rather large increments of x and P(1/2) were used. From these data the possible values at which chi squared could dip were observed and these regions were searched using a smaller increment for x and P(1/2). From these data the number of regions where chi squared could be a minimum was again narrowed down and a final search was made using increments of arctan $x=1^{\circ}$ and 0.005 for P(1/2) and P(3/2).

RESULTS AND CONCLUSIONS

As mentioned earlier, the data from four different gamma rays (3.94, 3.88, 1.33, and 1.15) were analyzed in order to try to determine the angular momentum of the 3.88 and 3.94-MeV levels. A very weak gamma ray at 1.35 MeV was observed and data were also taken for this gamma ray; however, it was too weak to be analyzed. The data shown in Table 1 were corrected for accidentals and multiplied by the proper particles ratio for each angle. The double escape and full energy peak data were added together for the 3.88 and 3.94-MeV data.

	30°	45°	55°	75°	90°
3.94	159	143	141	146	129
E	12.6	12.0	11.0	12.1	11.4
3.88	180	171	164	157	133
E	13.4	13.1	12.8	12.5	11.5
1.35	0	57	8	42	52
E		7.5	2.8	6.5	7.2
1.33	144	136	126	124	121
E	12.0	11.7	11.2	11.1	11.0
1.15	136	138	128	110	122
E	11.7	11.7	11.3	10.4	11.0

Table 1: Counts and error where N is the number of counts and E is the error.

The data were plotted and a least-squares fit to Legendre polynomials was performed. Table 2 shows the calculated coefficients for the least-squares analysis and Plate III shows the data points and the least-squares analysis plot.

The chi-squared analysis results are shown in Table 3. This

Level	Branch	a_0	a_2	a_4
3.88	3.88→g.s.	160.2±5.8	29.9±16.6	-14.3±22.1
	3.88→2.53	130.6±5.2	22.1±14.9	5.65±19.8
3.94	3.94→g.s.	143.9±5.5	21.4±15.7	6.91±20.8
	3.94→2.82	126.4±5.1	18.5±14.5	-6.22±19.7

Table 2: Legendre polynomial coefficients.

Arctan x	-80°	-60°	-40°	-20°	0°	20°	40°	60°	80°
3.94									
3/2	.4018		.4019		.4021	.4017	.4014	.4016	.4019
5/2				.3636					.3868
3.88									
5/2				.3908					
7/2						.4743			
3.88→2.53									
3/2	.0609			.0609	.0608	.0609		.0609	.0609
5/2					.0597				
4.12→2.82									
3/2	.0608		.0612	.0608		.0608		.0608	.0609
5/2						.0555			.0330
7/2			.0328						
3.94→2.82									
3/2		.4360	.4364		.4360	.4358		.4361	.4364
5/2								.4026	
7/2			.4033			.4042			

Table 3: Chi-squared values for the various transitions and spins of the initial state. The table shows typical values of chi squared for various values of arctan x and J for the different transitions.

EXPLANATION OF PLATE III

Experimental data distribution and theoretical least-squares fit of the data.

PLATE III

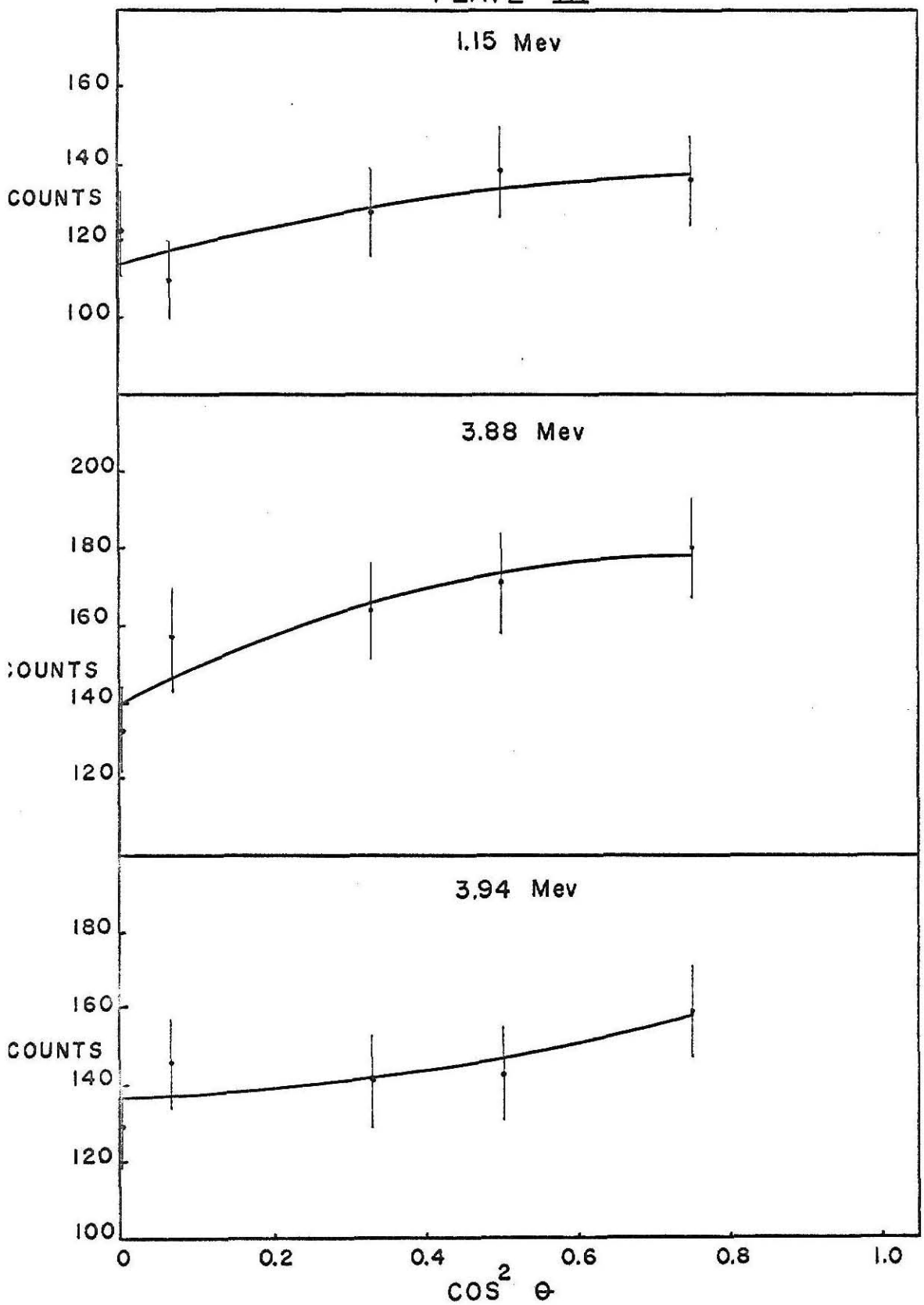
1.15 Mev
160
140
COUNTS
120
100
3.88 Mev
200
180
160
COUNTS
140
120
3.94 Mev
180
160
COUNTS
140
120
100
0
0.2
0.4
0.6
0.8
1.0
COS² θ

EXPLANATION OF PLATE IV

Plot of chi squared versus arctan x for the 3.88→g.s. transition.

PLATE IV

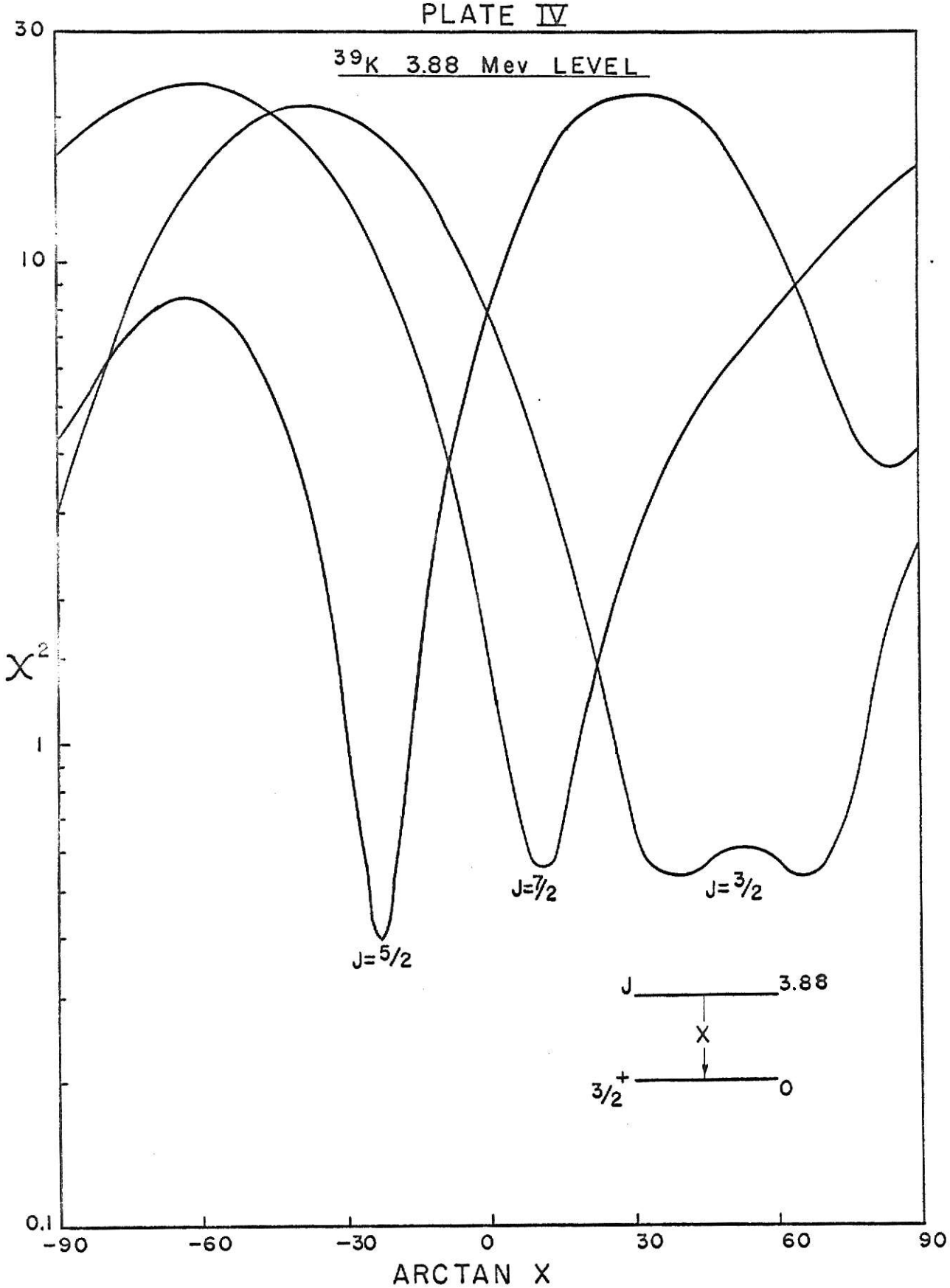
^{39}K 3.88 Mev LEVEL
30
10
1
0.1
X^2
J=5/2
J=7/2
J=3/2
J
3.88
X
3/2+
0
-90
-60
-30
0
30
60
90
ARCTAN X

EXPLANATION OF PLATE V

Plot of chi squared versus arctan x for the 3.94→g.s. transition.

PLATE V

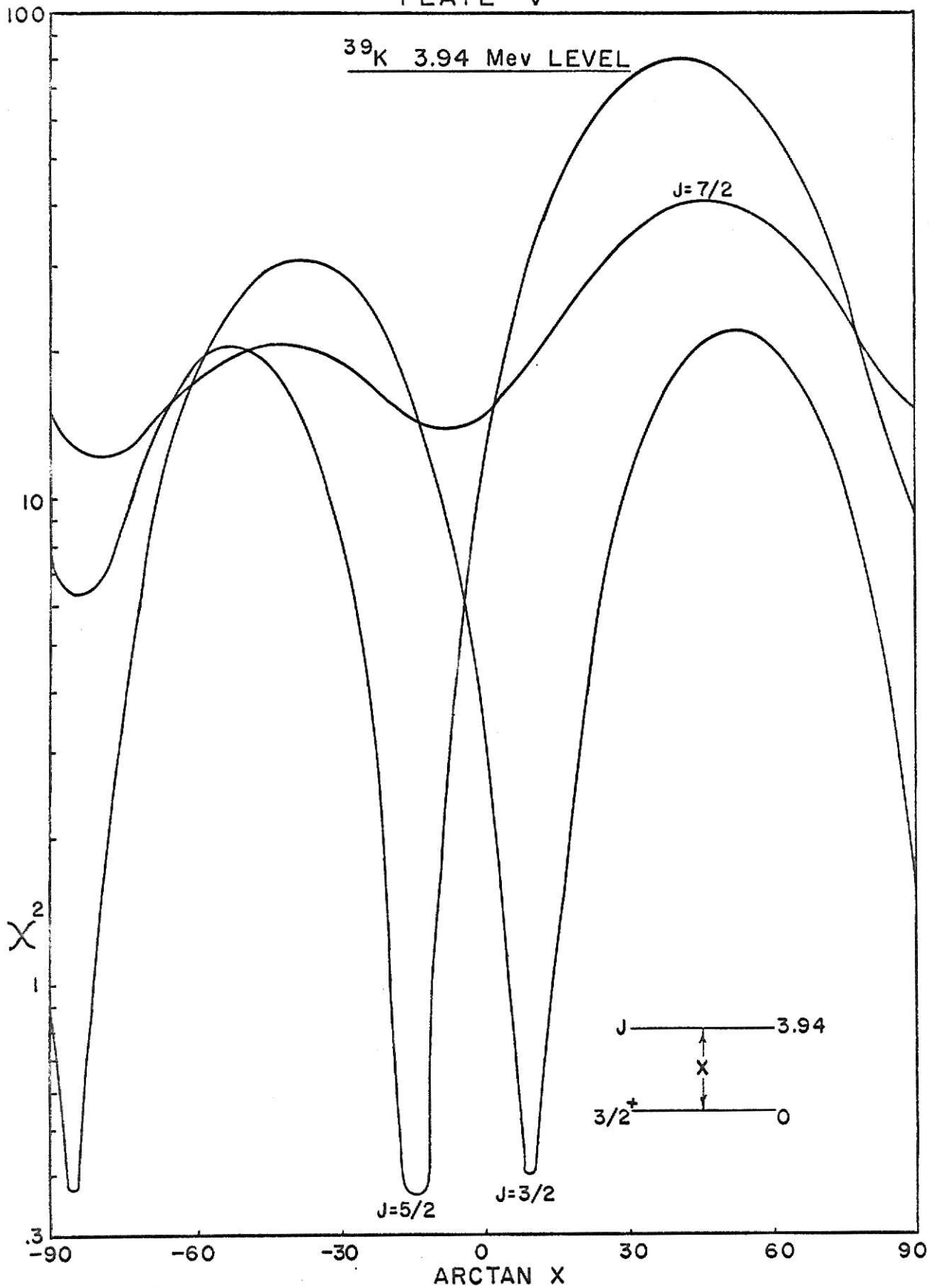
^{39}K 3.94 Mev LEVEL
J=7/2
J=5/2
J=3/2
J
3.94
X
3/2+
0
100
10
1
.3
χ^2
-90
-60
-30
0
30
60
90
ARCTAN X

is the data from the final search of parameters where P(1/2) was incremented by 0.005 and tan x by 1°. Initial spin states which had not shown minima in chi squared had been eliminated in earlier runs, and only those areas where there was a well defined minimum were searched using the above small increments. Therefore the difference in chi-squared values was quite small for the incrementing of one parameter. This was especially true near the minima since the function tended to flatten out near these points; therefore, the minimum values obtained for chi squared were very near the actual minimum values of the function. Plates IV and V show plots of the chi-squared analysis for the 3.88→g.s. and the 3.94→g.s. transitions for various spins of the initial state. The plots show chi squared as a function of arctan x. The values of the population parameters were fixed at the value which gave the lowest minimum for each energy level.

3.88-MeV Level

The data from the 3.88-MeV to ground state transition showed that J=3/2, 5/2, or 7/2 because all of these J values had chi-squared values less than one. This meant that the parameters varied in the theoretical calculation of the angular correlation had values which yielded theoretical results which were within one standard deviation of the experimental data. In other words, all three spins (3/2, 5/2, and 7/2) had very high probabilities (greater than 70%) of being statistically correct; thus, no one spin was uniquely determined.

The 3.88→2.53 MeV transition was analyzed to determine the initial state spin. The energy of this gamma ray was very close to the 4.12→2.82 transition, and therefore these data were analyzed for both transitions. The chi-squared analysis of the 3.88→2.53 transition indicated that J=3/2 or 5/2 (see Table 4). Other values for J were eliminated because they yielded large chi-squared values.

By combining the results of these two transitions J=7/2 was eliminated because the 3.88→2.53 MeV transition showed that J=7/2 was improbable; therefore, the possible values of J were determined to be J=3/2 or 5/2 with J=5/2 being the most probable. The mixing ratio of the 3.88→0 transition for J=5/2 was arctan x=-23±0.5° or x=-0.424±0.01. The mixing ratio for the 3.88→2.53 transition for J=5/2 was arctan x=-14±0.5° or x=-0.249±0.017. The mixing ratios for J=3/2 were arctan x= 38±0.5° or x=0.781±0.014 for the 3.88→0 transition and arctan x=-12±0.5° or x=0.2126±0.009 for the 3.88→2.53 transition.

3.94-MeV Level

Analysis of the chi-squared data from Plate V (3.94→0) determined that the spin of this level was not 7/2. As is shown in the plot of chi squared for this level and also Table 3 the minima for J=3/2 and J=5/2 were very close in value and were both less than one; therefore, it was impossible to uniquely determine the spin. In an attempt to determine the sensitivity of the correlation to changes in the data, the chi-squared

analysis was carried out again using the fine search around the values of the parameters which yielded minima in the last set of data. One of the data points was changed by 1/2 of the value of the error bar. This change yielded chi-squared values which were somewhat lower than the previous values, but the value for J=3/2 was lower than the value for J=5/2. Therefore it was impossible to determine the spin of the 3.94-MeV level from the 3.94→0 transition other than to say J=3/2 or 5/2.

	original χ^2	new χ^2
J=3/2	0.4000	0.3218
J=5/2	0.3636	0.3303

The 3.94→2.82 transition showed a low dip in chi squared for J=7/2 however, this was not the lowest minimum and due to the poor correlation of this spin for the 3.94→0 transition J=7/2 was eliminated. From the remaining data J=5/2 yielded a lower chi-squared value than did the correlation for J=3/2; however, the difference in chi-squared values was not a significant difference so it was impossible to make a definite statement about the spin of the 3.94 MeV level from the data other than to say J=3/2 or 5/2.

By combining the results from the above two transitions it was impossible to uniquely determine the spin of the 3.94-MeV level. It seemed evident from the 3.94→0 transition that J=7/2 was very unlikely; however, J=3/2 and J=5/2 both were viable options for the spin of this level. Lopes et al determined the spin of this level to be J=5/2 or 7/2.[1] Since this experiment was

done under somewhat different conditions (therefore the population parameters were different) and since they eliminated J=3/2 and this experiment eliminated J=7/2, it seemed quite probable that J=5/2 for this level. The mixing ratio for the 3.94→0 transition and J=5/2 was arctan x=-15±0.5° or x=-0.268±0.009. The mixing ratio for the 3.94→2.82 transition was arctan x= 34±0.5° or x=0.675±0.126.

In summary, better data are required in order to be able to make a definite statement about the spin of the 3.88 and 3.94 levels; however, by taking previous work into account, it seemed very probable that J=5/2 for the 3.94 level. Because of the small angular correlation effect for these levels, a better determination of the spins could be made by obtaining greater statistics in the data, either by using higher beam currents or by collecting data over a longer period of time.

APPENDIX I

The Legendre Least Squares Analysis program fitted the experimental data to a series of Legendre polynomials. The program was designed to do a fit to one of three sets of data punched on the data cards. Thus NGROUP determined which set of data was to be analyzed. N was the number of data points to be analyzed and KMIN and KMAX were the maximum and minimum values of K. For each data point AN(I) was the angle at which the data were taken (in degrees), Y(I) was the number of counts, and ER(I) was the error at that point. The program calculated a(0), a(2), a(4),··· to a(MAX) up to KMAX=8, then it calculated the coefficients again reducing KMAX by two. The program continued until KMAX=0.

```
C     LEGENDRE LEAST SQUARES ANALYSIS
C     NGROUP - READ FIRST,SECOND, OR THIRD GROUP OF DATA
C     ON CARDS
C
      DIMENSION AN(10),Y(10),ER(10),WT(10),P(7,10)
      DIMENSION CTH(10),YY(10),A(10,10),CF(10),ECF(10)
      DIMENSION AINV(10,10)
      RAD=180./3.1415926
    1 CONTINUE
      READ(1,10) N,KMIN,KMAX,NGROUP
   10 FORMAT(4I5,8A8)
      IF(NGROUP) 700,701,700
  701 NGROUP=1
  700 CONTINUE
      K=KMAX
      WRITE(3,100)
  100 FORMAT(1H ,'POINT       ANGLE      YIELD     ERROR    ')
      DO 101 I=1,N
      GO TO (601,602,603),NGROUP
  601 READ(1,30) AN(I),Y(I),ER(I)
   30 FORMAT(3F10.5)
      GO TO 2
  602 READ(1,604) AN(I),Y(I),ER(I)
  604 FORMAT(F10.5,20X,2F10.5)
      GO TO 2
  603 READ(1,605) AN(I),Y(I),ER(I)
  605 FORMAT(F10.5,40X,2F10.5)
    2 CONTINUE
C
      WRITE(3,40) I,AN(I),Y(I),ER(I)
   40 FORMAT(1H ,I3,5X,F7.2,2E12.4)
      CTH(I)=COS(AN(I)/RAD)
  101 CONTINUE
C
C     CALCULATE UNNORMALIZED WEIGHTS, (1.0/EN(I))SQUARED
      DO 103 I=1,N
      WT(I)=(1.0/ER(I))*(1.0/ER(I))
  103 CONTINUE
C
      DO 105 I=1,N
      P(1,I)=1.0
      P(2,I)=CTH(I)
      NT=KMAX+1
      IF(KMAX-1)7,199,199
  199 DO 106 J=3,NT
      W=1.0/(J-1)
  106 P(J,I)=2*P(2,I)*P(J-1,I)-W*P(2,I)*P(J-1,I)
     1+W*P(J-2,I)-P(J-2,I)
      JM=K/2+1
      DO 107 J=1,JM
      NT=2*J-1
  107 P(J,I)=P(NT,I)
```

```
    7 CONTINUE
  105 CONTINUE
    4 CONTINUE
      JM=K/2+1
      DO 130 J=1,JM
      YY(J)=0.0
      DO 130 I=1,N
      YY(J)=YY(J)+Y(I)*P(J,I)*WT(I)
  130 CONTINUE
C
      DO 140 J=1,JM
      DO 140 L=1,JM
      A(J,L)=0.0
      DO 140 I=1,N
      A(J,L)=A(J,L)+P(J,I)*P(L,I)*WT(I)
  140 CONTINUE
C
      CALL MATINV (JM,A,AINV)
C
      DO 150 J=1,JM
      CF(J)=0.0
      DO 150 L=1,JM
      CF(J)=CF(J)+AINV(J,L)*YY(L)
  150 CONTINUE
C
      DO 160 J=1,JM
      ECF(J)=SQRT(AINV(J,J))
  160 CONTINUE
C
      WRITE(3,60) K
   60 FORMAT(//38HFIT WITH MAXIMUM ORDER OF POLYNOMIAL
     1 =, I3/)
      WRITE(3,180)
  180 FORMAT(1H ,'  K',8X'COEFF',8X'ERROR' /)
C
      DO 181 J=1,JM
      KK=2*(J-1)
      WRITE(3,182) KK,CF(J), ECF(J)
  182 FORMAT(1H,I3,2E12.4)
  181 CONTINUE
      IF(K-KMIN)185,184,185
  185 K=K-2
      GO TO 4
  184 GO TO 1
      END
```

```
C     MATRIX INVERSION SUBROUTINE
      SUBROUTINE MATINV (N,AIN,A)
      DIMENSION IPIVOT(10),PIVOT(10),INDEX(10,2)
      DIMENSION A(10,10),AIN(10,10)
      DO 1 I=1,N
      DO 1 J=1,N
    1 A(I,J)=AIN(I,J)
      DETERM=1.0
      DO 20 J=1,N
   20 IPIVOT(J)=0
      DO 550 I=1,N
      AMAX=0.0
      DO 105 J=1,N
      IDUM=IPIVOT(J)-1
      IF(IDUM)60,105,60
   60 DO 100 K=1,N
      IDUM=IPIVOT(K)-1
      IF(IDUM)80,100,740
   80 ADUM=A(J,K)
      BDUM=ABS(AMAX)-ABS(ADUM)
      IF(BDUM)85,100,100
   85 IROW=J
      ICOLUM=K
      AMAX=A(J,K)
  100 CONTINUE
  105 CONTINUE
      IPIVOT(ICOLUM)=IPIVOT(ICOLUM)+1
      IF(IROW-ICOLUM)140,260,140
  140 DETERM=-DETERM
      DO 200 L=1,N
      AMAX=A(IROW,L)
      A(IROW,L)=A(ICOLUM,L)
  200 A(ICOLUM,L)=AMAX
  260 INDEX(I,1)=IROW
      INDEX(I,2)=ICOLUM
      PIVOT(I)=A(ICOLUM,ICOLUM)
      DETERM=DETERM*PIVOT(I)
      A(ICOLUM,ICOLUM)=1.0
      DO 350 L=1,N
  350 A(ICOLUM,L)=A(ICOLUM,L)/PIVOT(I)
  380 DO 550 L1=1,N
      IF(L1-ICOLUM)400,550,400
  400 AMAX=A(L1,ICOLUM)
      A(L1,ICOLUM)=0.0
      DO 450 L=1,N
  450 A(L1,L)=A(L1,L)-A(ICOL,L)*AMAX
  550 CONTINUE
      DO 710 I=1,N
      L=N+1-I
      IDUM=INDEX(L,1)-INDEX(L,2)
      IF(IDUM)630,710,630
  630 IROW=INDEX(L,1)
```

```
      ICOLUM=INDEX(L,2)
      DO 705 K=1,N
      AMAX=A(K,IROW)
      A(K,IROW)=A(K,ICOLUM)
      A(K,ICOLUM)=AMAX
  705 CONTINUE
  710 CONTINUE
  740 RETURN
      END
```

The Theoretical Analysis program gave a theoretical value for the angular correlation. This program generated values of $W(\theta)$ while varying the mixing ratio (x) and θ. From the output of this program one could get a feeling for the type of angular dependence expected from experimental data.

The program began by reading in the tables found in Poletti and Warburton's article.[2] Each line of the table went on one card. The tables with half spins were the ones used. MM was the spin of the final state. All spins were in units of 1/2 so if the initial state had spin 3/2 then MM=3. NDEL was the value by which θ was incremented. If NQ was one, the table of values was printed out. In any case the specific coefficients used in the calculation were printed.

The mixing ratio (x) was set in the program to go from -100 to 100 in steps divisible by 10 and 0 was also included. The smallest absolute value of x was $|x|=0.01$. The POLY function calculated the desired Legendre polynomial values and was called for in the main program.

```
C     THEORETICAL ANGULAR CORRELATION
      DIMENSION RHO(10,11,11),FLL(10,11,11),FLL1(10,11,11),
     1FL1L1(10,11,11),RH(10),W(12),F(8,12)
C     READ IN RHO TABLE   K=K,M=A,L=ALPHA
      DO 50 K=1,10
      DO 50 M=1,11
      DO 50 L=1,11
      FLL(K,M,L)=0.
      FLL1(K,M,L)=0.
      FL1L1(K,M,L)=0.
   50 RHO(K,M,L)=0.
      I=2
      DO 15 M=3,11,2
      DO 16 K=2,10,2
      READ(1,105) RHO(K,M,1), RHO(K,M,3), RHO(K,M,5), RHO(K,M,7),
     1RHO(K,M,9), RHO(K,M,11)
      IF(K-I)16,15,15
   16 CONTINUE
   15 I=I+2
  105 FORMAT(6F7.4)
C     READ IN FLL(K,N,M) TABLE
C     K=K, N=B, M=A
      DO 19 M=3,11,2
      DO 19 N=1,11,2
      DO 19 K=2,8,2
   19 READ(1,106) FLL(K,N,M),FLL1(K,N,M),FL1L1(K,N,M)
  106 FORMAT(3F7.4)
C     READ IN INPUT DATA IN HALF INTEGER VALUES
   42 READ(1,107) MM,NN,NDEL,NQ
  107 FORMAT(4I3)
      IF(NQ)20,20,21
C     PRINT OUT OF TABLES
   21 I=2
      DO 24 M=3,11,2
      DO 23 K=2,10,2
      WRITE(3,108) RHO(K,M,1),RHO(K,M,3),RHO(K,M,5),RHO(K,M,7),
     1RHO(K,M,9),RHO(K,M,11)
  108 FORMAT(6F10.4)
      IF(K-1)23,24,24
   23 CONTINUE
   24 I=I+2
      WRITE(3,109)
  109 FORMAT(1H0,'FLL(K,N,M) TABLE')
      DO 25 M=3,11,2
      DO 25 N=1,11,2
      DO 25 K=2,8,2
   25 WRITE(3,110) FLL(K,N,M),FLL1(K,N,M),FL1L1(K,N,M)
  110 FORMAT(3F10.4)
   20 WRITE(3,111) MM,NN
  111 FORMAT(1H1,14X'ANGULAR CORRELATION FOR A SINGLE ',I2,'/2 '
     1,I2,'/2 TRANSITION'//)
      WRITE(3,150) MM,MM,NN,MM,NN,MM,NN,MM
```

```
  150 FORMAT(4X'K    RHO(K,',I2,',1)    RHO(K,',I2,',3)   FLL
     1(K,',I2,',',I2,')  FLL1(K,',I2,',',I2,') FL1L1(K,',I2,',',
     1I2,')')
      DO 70 K=2,10,2
   70 WRITE(3,151) K,RHO(K,MM,1),RHO(K,MM,3),FLL(K,NN,MM),FLL1
     1(K,NN,MM),FL1L1(K,NN,MM)
  151 FORMAT(1H ,I4,5F15.4)
      WRITE(3,112)
  112 FORMAT(1H0,57X'X')
      WRITE(3,113)
  113 FORMAT(3X'THETA',3X'P(1/2)',3X'P(3/2)',3X'100',7X'10',8X
     1'1',7X'.1',6X'.01',6X'0.0',5X'-100',6X'-10',7X'-1',6X'-.1'
     1,5X'-.01')
      P1=.5
   40 P3=(1.0-2.0*P1)/2.0
C     CALCULATION OF RHO OR RH
      DO 27 K=2,10,2
   27 RH(K)=RHO(K,MM,1)*P1+RHO(K,MM,3)*P3
C     CALCULATION OF F COEFFICIENTS
      KK=1
      LL=6
      GO TO 202
  204 KK=7
      LL=12
  202 DO 28 K=2,8,2
      X=1000.
      DO 28 J=KK,LL
      X=X/10.
      IF(J-6)201,201,200
  200 X=-X
  201 F(K,J)=(FLL(K,NN,MM)-2.0*X*FLL1(K,NN,MM)+X*X*FL1L1(K,NN,MM)
     1)/(1+X*X)
      IF(ABS(X)-.01)28,29,28
   29 X=0.
   28 CONTINUE
      IF(KK-1)203,204,203
  203 DO 30 I=1,91,NDEL
      THETA=I-1
      DO 31 J=1,11
      W(J)=1.
      DO 32 K=2,8,2
   32 W(J)=W(J)+RH(K)*F(K,J)*POLY(K,THETA)
   31 CONTINUE
C     ROUND OFF OF THE W(J)
      DO 82 J=1,11
      Q=ABS(W(J))+.00005
      KK=Q*10000.
      LL=W(J)*10000.
      IF(KK-LL)82,82,81
   81 IF(W(J))83,84,84
   83 W(J)=W(J)-.0001
      GO TO 82
   84 W(J)=W(J)+.0001
```

```
 82 CONTINUE
 30 WRITE(3,120) THETA,P1,P3,W(1),W(2),W(3),W(4),W(5),W(6),W(7)
   1,W(8),W(9),W(10),W(11)
120 FORMAT(2XF5.1,2F9.2,11F9.4)
    IF(P1-.25)35,36,37
 36 P1=0.
    WRITE(3,152)
152 FORMAT(1H1)
    WRITE(3,113)
    GO TO 40
 37 P1=.25
    GO TO 40
 35 IF(NQ)41,42,41
 41 STOP
    END
```

```
      FUNCTION POLY(K,THETA)
      RAD=180.0/3.1415926
      X=COS(THETA/RAD)
      XSQ=X*X
      X4=XSQ*XSQ
      X6=XSQ*X4
      X8=X4*X4
      KP=K/2+1
      GO TO (1,2,3,4,5),KP
    1 POLY=1.0
      RETURN
    2 POLY=0.5*(3.0*XSQ-1.0)
      RETURN
    3 POLY=0.125*(35.0*X4-30.0*XSQ+3.0)
      RETURN
    4 POLY=0.0625*(231.0*X6-315.0*X4+105.0*XSQ-5.0)
      RETURN
    5 POLY=0.0078125*(6435.0*X8-12012.0*X6+6930.0*X4-1260.0*XSQ
     1+35.0)
      RETURN
      END
```

The Chi-Squared Analysis program compared the experimental data with the theoretical data obtained in the last program by means of a chi-squared analysis. The previous program was used as a subprogram for this program. The analysis used in this program was

$$\chi^2 = (1/\sigma)\sum_N \left[(Y(\theta)-W(\theta))^2/E^2\right]$$

where σ was the number of degrees of freedom, $Y(\theta)$ was the normalized experimental value, and E was the error involved.

The program first read the data table discussed in the last program. For each set of data to be analyzed the data card was as follows: N was the number of data points, NN was the spin of the final state in units of 1/2, ANORM was the normalizing factor, MM was the spin of the initial state in units of 1/2, GAMMA was the energy of the gamma ray, KK determined whether a new set of counts, angle, and error was to be read, P1 and PF were the initial and final values for P(1/2) and PINC was the increment by which P(1/2) was decreased. NANGI, NANGF, NAINC were the initial and final angles and the increment for tan x.

For the first search of a set of parameters at a given energy (GAMMA) KK=0. The program read the angle, counts, and error data. For subsequent searches at the same energy KK=1. The program then used the same angle, counts, and error data as before. The angle, counts, and error data (PSI(K), CNTS(K), ERROR(K)) were read after each data card for which KK=0.

```
C       CHI-SQUARED ANALYSIS
C       ANORM=0 PROGRAM DOES NOT NORMALIZE
        DIMENSION CHISQ(12),CNTS(12),PSI(12),ERROR(12),THETA(12)
        DIMENSION RHO(10,11,11),FLL(10,11,11),FLL1(10,11,11),
       1FL1L1(10,11,11),W(11),ANG(11)
        COMMON RHO,FLL,FLL1,FL1L1
C       READ IN RHO TABLE  K=K, M=A, L=ALPHA
        DO 50 K=1,10
        DO 50 M=1,11
        DO 50 L=1,11
        FLL(K,M,L)=0.
        FLL1(K,M,L)=0.
        FL1L1(K,M,L)=0.
   50   RHO(K,M,L)=0.
        I=2
        DO 25 M=3,11,2
        DO 16 K=2,10,2
        READ(1,105) RHO(K,M,1),RHO(K,M,3),RHO(K,M,5),RHO(K,M,7),
       1RHO(K,M,9),RHO(K,M,11)
        IF(K-I)16,25,25
   16   CONTINUE
   25   I=I+2
  105   FORMAT(6F7.4)
C       READ IN FLL(K,N,M) TABLE
C       K=K, N=B, M=A
        DO 19 M=3,11,2
        DO 19 N=1,11,2
        DO 19 K=2,8,2
   19   READ(1,106) FLL(K,N,M),FLL1(K,N,M),FL1L1(K,N,M)
  106   FORMAT(3F7.4)
  333   READ(1,114) N,NN,ANORM,MM,GAMMA,KK,P1,PF,PINC,NANGI,NANGF,
       1NAINC
  114   FORMAT(2I3,F8.1,I3,F5.2,I3,3F5.2,3I3)
        NANGI=NANGI-NAINC
        DO 221 I=1,11
        NANGI=NANGI+NAINC
  221   ANG(I)=NANGI
        DO 1 K=1,12
        CHISQ(K)=0.
        IF(KK.EQ.1) GO TO 1
        CNTS(K)=0.
        THETA(K)=0.
        ERROR(K)=0.
    1   CONTINUE
        WRITE(3,100) GAMMA
  100   FORMAT(1H1,20X'CHI-SQUARED ANALYSIS FOR',F5.2,'MEV GAMMA-
       1RAY')
        WRITE(3,112)
  112   FORMAT(1H0,57X'ARCTANGENT')
        WRITE(3,113) (ANG(I), I=1,11)
  113   FORMAT(4X'J/2',4X'P(1/2)',3X'P(3/2)',2XF5.1,10F9.1)
        IF(KK.EQ.1) GO TO 222
```

```
      DO 2 K=1,N
      READ(1,115) PSI(K),CNTS(K),ERROR(K)
  115 FORMAT(3F10.4)
      CNTS(K)=CNTS(K)/ANORM
    2 ERROR(K)=ERROR(K)/ANORM
  222 P1=P1+PINC
  936 P1=P1-PINC
      DO 6 J=1,11
      CHISQ=0.
      DO 7 M=1,N
      CALL WTH(J,MM,NN,P1,ANG(J),W(J),PSI(M))
      IF(ERROR(M))7,37,7
   37 ERROR(M)=1.
    7 CHISQ(J)=CHISQ(J)+((W(J)-CNTS(M))**2/ERROR(M)**2)
      CHISQ(J)=CHISQ(J)/(N-2)
    6 CONTINUE
      P3=(1.0-2.0*P1)/2.0
      WRITE(3,116) MM,P1,P3,(CHISQ(J),J=1,11)
  116 FORMAT(3XI3,1X2F9.3,11F9.4)
      IF(P1-PF)333,333,936
  334 STOP
      END
```

```
      SUBROUTINE WTH(J,MM,NN,P1,ANG,W,THETA)
      DIMENSION RHO(10,11,11),FLL(10,11,11),FLL1(10,11,11),
     1FL1L1(10,11,11),F(8),RH(10)
      COMMON RHO,FLL,FLL1,FL1L1
      RAD=180./3.1415926
      IF(ANG.EQ.90.) ANG=89.
      IF(ANG.EQ.-90.) ANG=-89.
      X=TAN(ANG/RAD)
      P3=(1.0-2.0*P1)/2.
      DO 95 K=2,10,2
   95 RH(K)=RHO(K,MM,1)*P1+RHO(K,MM,3)*P3
C     CALCULATION OF F COEFFICIENTS
      DO 14 K=2,8,2
   14 F(K)=(FLL(K,NN,MM)-2.0*X*FLL1(K,NN,MM)+X*X*FL1L1(K,NN,MM))
     1/(1+X*X)
      W=1.
      DO 15 K=2,8,2
   15 W=W+RH(K)*F(K)*POLY(K,THETA)
C     ROUND OFF OF W
      Q=ABS(W)+.00005
      KK=Q*10000.
      LL=W*10000.
      IF(KK-LL)82,82,81
   81 IF(W)83,84,84
   83 W=W-.0001
      GO TO 82
   84 W=W+.0001
   82 RETURN
      END
```

```
      FUNCTION POLY(K,THETA)
      RAD=180.0/3.1415926
      X=COS(THETA/RAD)
      XSQ=X*X
      X4=XSQ*XSQ
      X6=XSQ*X4
      X8=X4*X4
      KP=K/2+1
      GO TO (1,2,3,4,5),KP
    1 POLY=1.0
      RETURN
    2 POLY=0.5*(3.0*XSQ-1.0)
      RETURN
    3 POLY=0.125*(35.0*X4-30.0*XSQ+3.0)
      RETURN
    4 POLY=0.0625*(231.0*X6-315.0*X4+105.0*XSQ-5.0)
      RETURN
    5 POLY=0.0078125*(6435.0*X8-12012.0*X6+6930.0*X4-1260.0*XSQ
     1+35.0)
      RETURN
      END
```

APPENDIX II

If a system is in a mixed state then it is given by a weighted sum of pure states $|n\rangle$. Each pure state $|n\rangle$ can be expressed in terms of a set of orthonormal states $|m\rangle$ such that

$$|n\rangle = \sum_m a_{nm} |m\rangle . \tag{1}$$

The expectation value of Q becomes

$$\langle Q\rangle = \sum_{nm'm} g_n a^*_{nm'} a_{nm} \langle m'| Q |m\rangle \tag{2}$$

and then one defines the following:

$$\langle m| \rho |m'\rangle = \sum_n g_n a^*_{nm'} a_{nm} , \tag{3}$$

so that the expectation value of Q is:

$$\langle Q\rangle = \sum_{mm'} \langle m| \rho |m'\rangle \langle m'| Q |m\rangle . \tag{4}$$

BIBLIOGRAPHY

1. J. S. Lopes et. al., "Electromagnetic properties of ^{39}K bound states," Nucl. Phys. A109(1968)241

2. A. R. Poletti and E. K. Warburton, "Study of the low-lying levels of F^{18} by means of the $O^{16}(He^3,p\gamma)F^{18}$ reaction," Phys. Rev. 137(1965)B595

3. J. M. Blatt and V. F. Weisskopf, Theoretical Nuclear Physics, (J. Wiley & Sons, New York, 1962), pp. 55-57

4. H. Frauenfelder and R. M. Steffen, K. Siegbahn (ed), Alpha-Beta- and Gamma-Ray Spectroscopy, (North-Holland Publishing Company, Amsterdam, 1965), Vol. II, pp. 997-1198

5. A. E. Litherland and A. J. Ferguson, "Gamma-ray angular correlations from aligned nuclei produced by nuclear reactions," Can. J. Phys. 39(1961)788

6. L. C. Biedenharn and M. E. Rose, "Theory of angular correlation of nuclear radiations," Rev. Mod. Phys. 25(1953)729

7. J. L. Black and W. Gruhle, "Calculation of angular correlation attenuation factors and efficiencies for lithium drifted germanium detectors," Nucl. Instr. and Meth. 46(1967)213

ACKNOWLEDGEMENTS

The author wishes to thank Dr. M. Kregar and R. Tapphorn for their assistance in collecting and analyzing data. The assistance of G. Hartnell and his staff was also appreciated in operating the Kansas State University 12-MeV accelerator. Thanks are due to E. Van Benschoten for drafting the plates for this thesis. Finally I wish to express thanks and appreciation to Dr. G. Seaman for his assistance and guidance in this project.

A STUDY OF THE SPIN OF THE FIFTH AND SIXTH EXCITED STATES OF ^{39}K

by

THOMAS R. WITTICK

B. S., Wheaton College, 1968

AN ABSTRACT OF A MASTER'S THESIS

submitted in partial fulfillment of the

requirements for the degree

MASTER OF SCIENCE

Department of Physics

KANSAS STATE UNIVERSITY
Manhattan, Kansas

1970

ABSTRACT

The particle-gamma angular correlation technique developed by Litherland and Ferguson was employed in order to try and determine the spin of the fifth and sixth excited states of ^{39}K. The reaction used was $^{39}K(p,p'\gamma)$. A beam of 6.71-MeV protons was directed onto a potassium-iodide target. Protons and gamma rays were observed in coincidence. Only protons which were back-scattered at an angle close to 180° were observed by the annular particle detector. Gamma rays were detected by a high resolution Ge(Li) detector at 30°, 45°, 55°, 75°, and 90°, and the data were normalized to a fixed particle count.

The data were fit to a series of even order Legendre polynomials using a least-squares fit method. This procedure showed a best fit to the data and also gave a normalization factor so that the experimental data could be compared to the theoretical angular correlation function. Finally a chi-squared analysis was performed in order to compare the experimental data to theoretical distributions. The population parameters, mixing ratio, and spin were varied in an attempt to find a set of parameters giving a significantly low chi-squared value thus showing those parameters to indeed be the most likely ones.

The spin of the fifth state (3.88 MeV) was measured by observing two transitions: 3.88→g.s. and 3.88→2.53. Analysis of both of these transitions showed that the possible values of J were 3/2 and 5/2. From the data obtained it was impossible to

uniquely determine the spin of this level. The spin of the sixth state (3.94 MeV) was measured by observing the 3.94→g.s. and the 3.94→2.82 transitions. These two transitions showed that J=3/2 and J=5/2 were both likely, but the spin of the state could not be uniquely determined from the data. However, work done previously by Lopes et al was combined with the results of this experiment to determine a very probable value of J=5/2 for the spin of the 3.94 level.